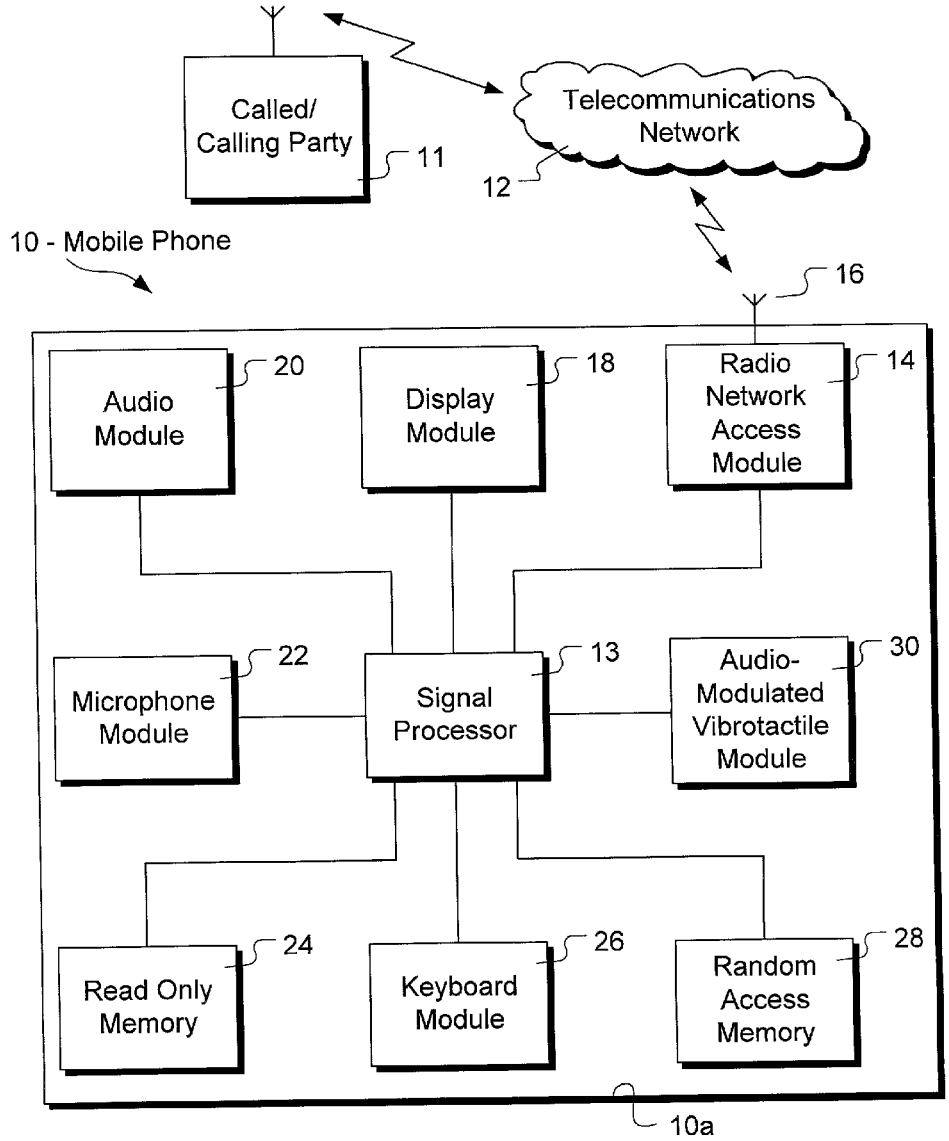
Called/
Calling Party
11
Telecommunications
Network
12
10 - Mobile Phone
16
Audio
Module
20
Display
Module
18
Radio
Network
Access
Module
14
Microphone
Module
22
Signal
Processor
13
Audio-
Modulated
Vibrotactile
Module
30
Read Only
Memory
24
Keyboard
Module
26
Random
Access
Memory
28
10a

FIG. 1