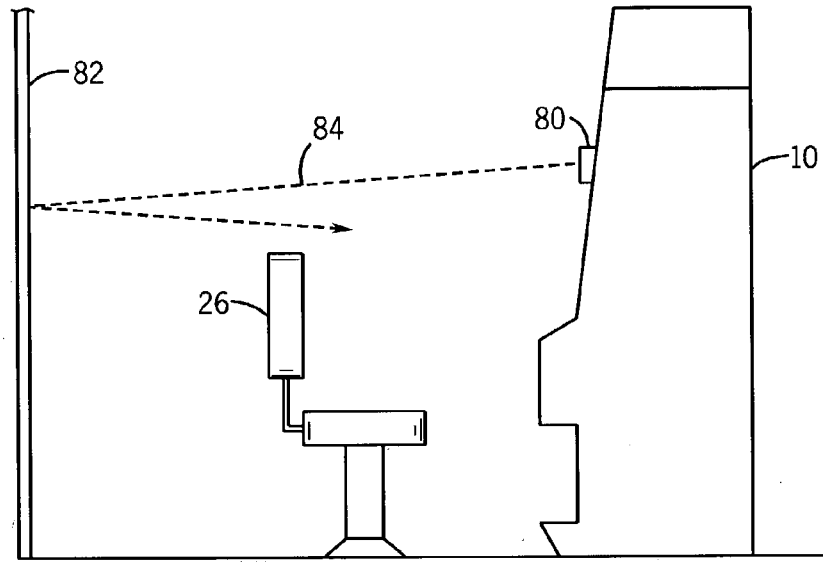
82
84
80
10
26

FIG. 9

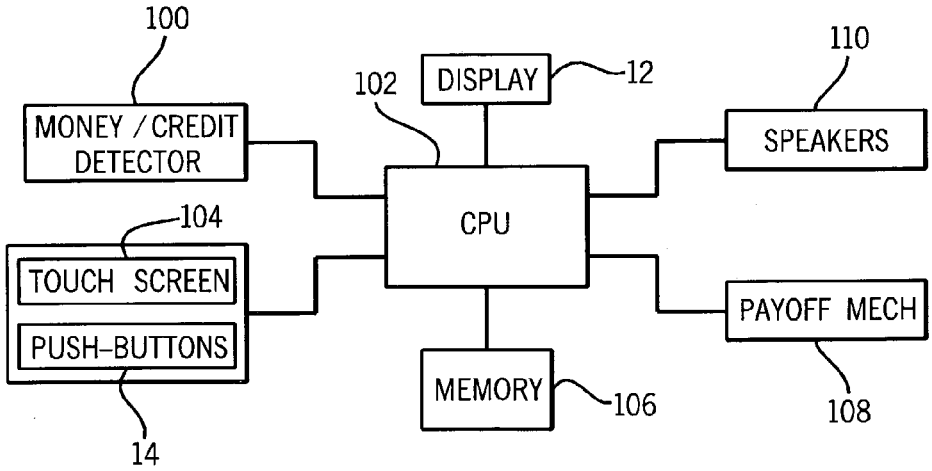
100
MONEY / CREDIT DETECTOR
102
DISPLAY
12
110
SPEAKERS
CPU
104
TOUCH SCREEN
PUSH-BUTTONS
14
PAYOFF MECH
MEMORY
106
108

FIG. 10