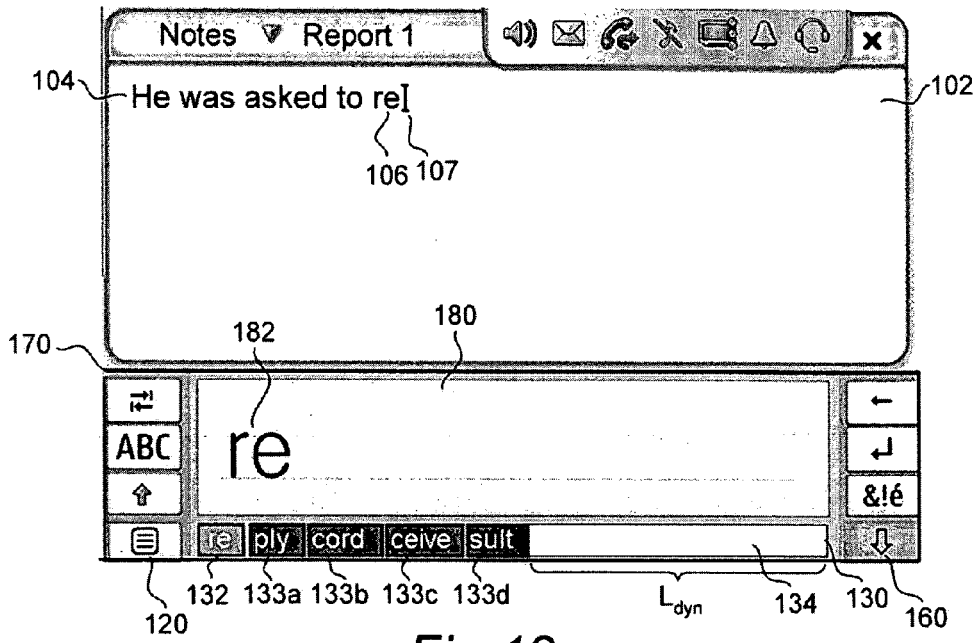
Notes
Report 1
He was asked to re
104
102
106
107
170
182
180
ABC
re
&!é
re
ply
cord
ceive
sult
120
132
133a
133b
133c
133d
L_{dyn}
134
130
160

Fig 13

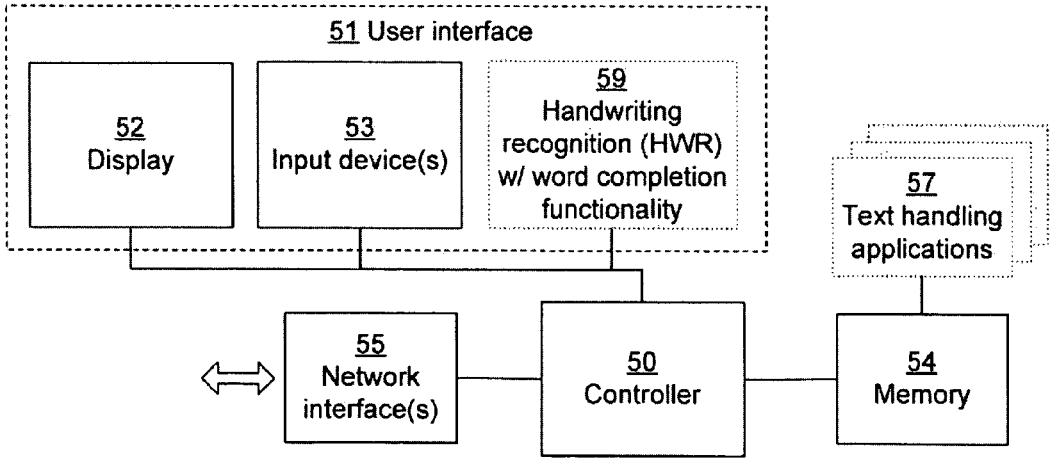
51 User interface
52 Display
53 Input device(s)
59 Handwriting recognition (HWR) w/ word completion functionality
57 Text handling applications
55 Network interface(s)
50 Controller
54 Memory

Fig 14