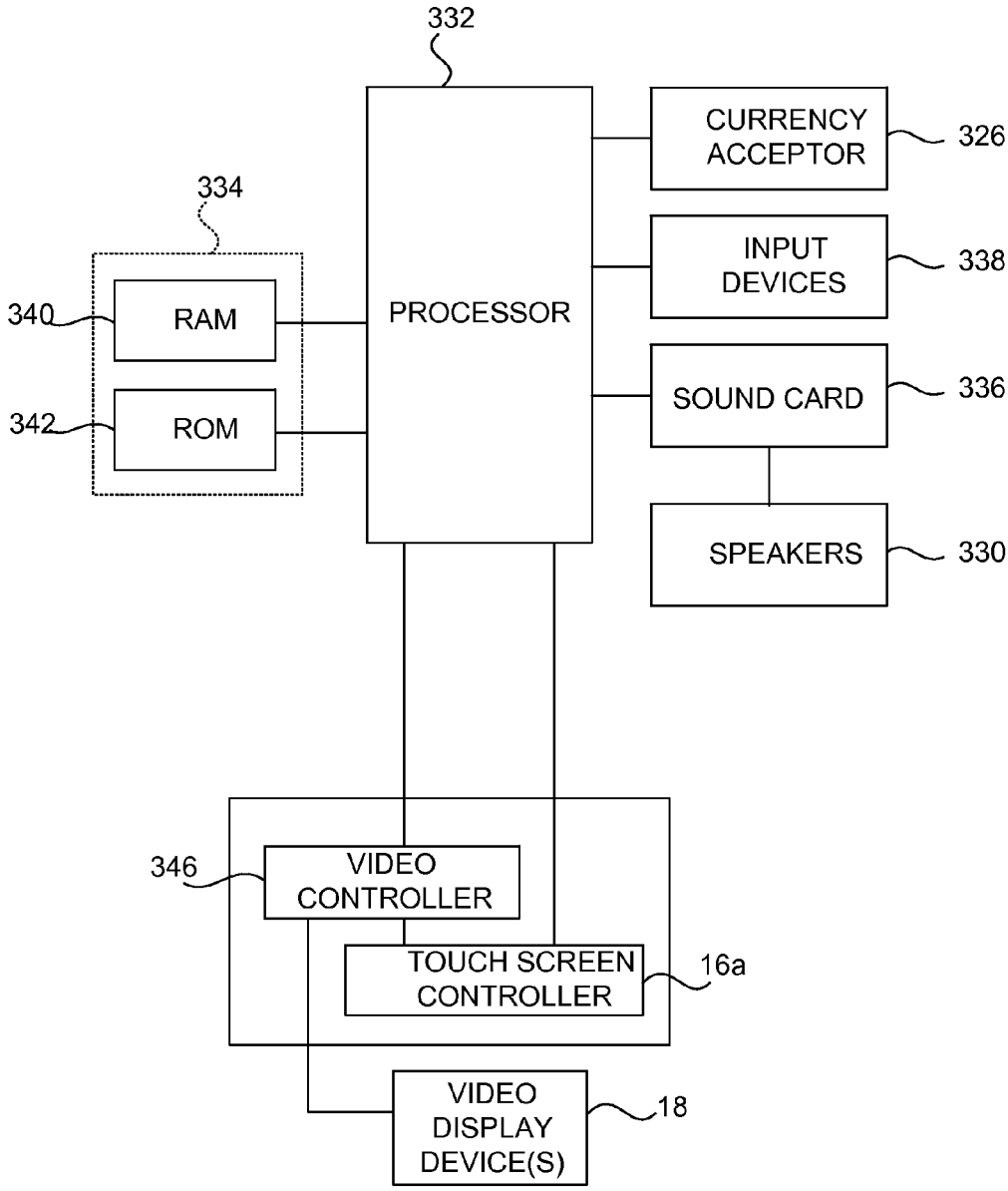
332
PROCESSOR
CURRENCY ACCEPTOR
326
INPUT DEVICES
338
SOUND CARD
336
SPEAKERS
330
334
340
RAM
342
ROM
346
VIDEO CONTROLLER
TOUCH SCREEN CONTROLLER
16a
VIDEO DISPLAY DEVICE(S)
18

Figure 7