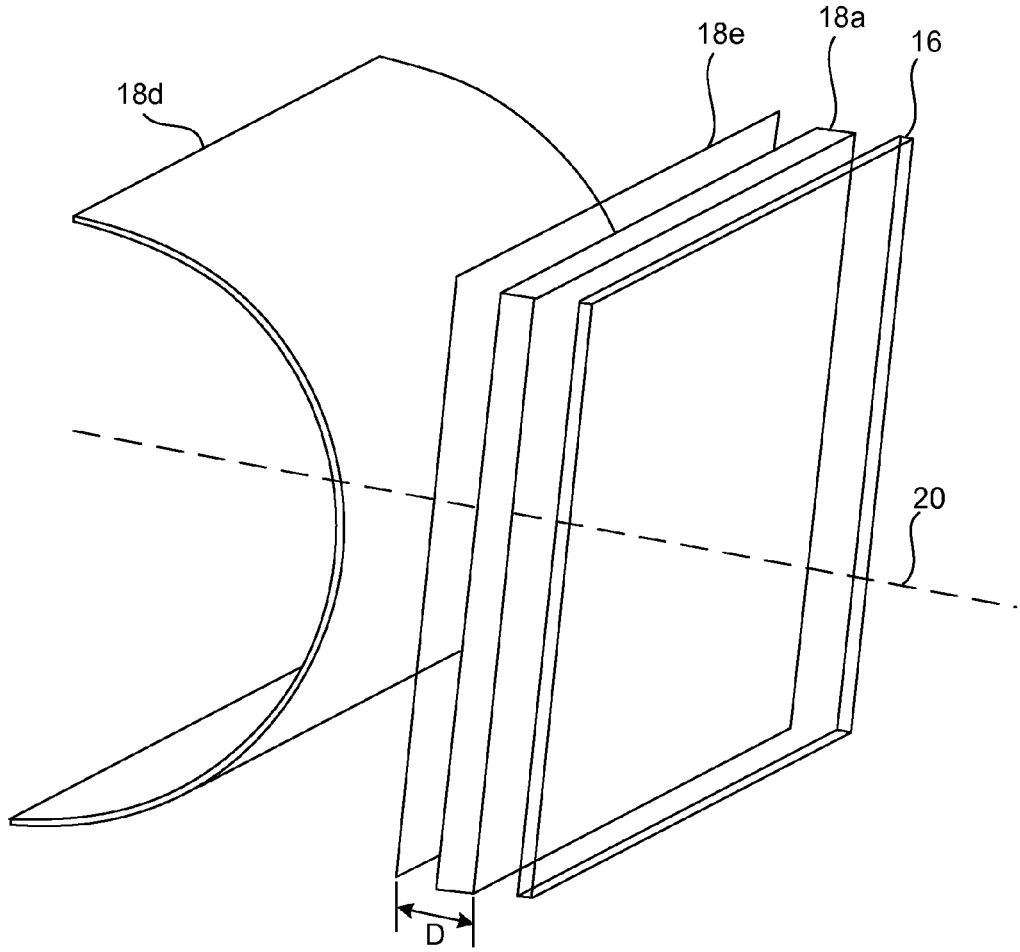

Figure 4C