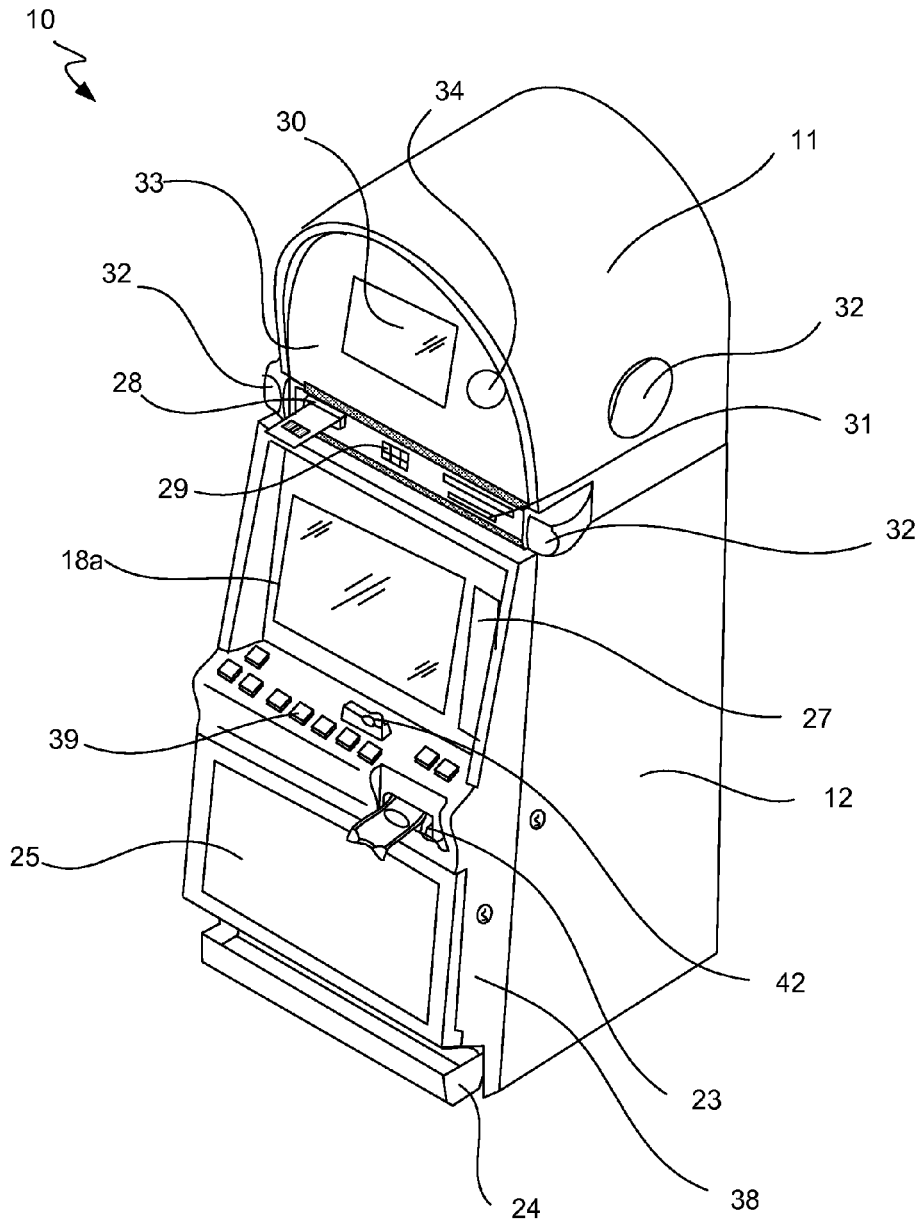

Figure 6A