FIG 11

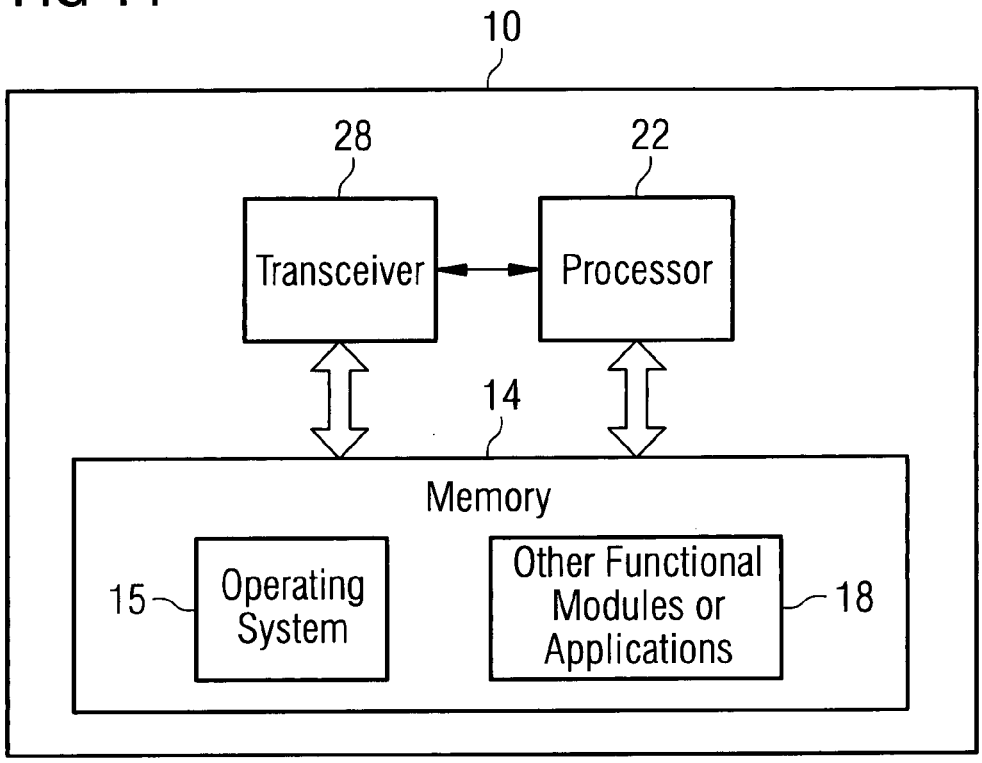
10
28
22
Transceiver
Processor
14
Memory
15
Operating System
Other Functional Modules or Applications
18

FIG 12

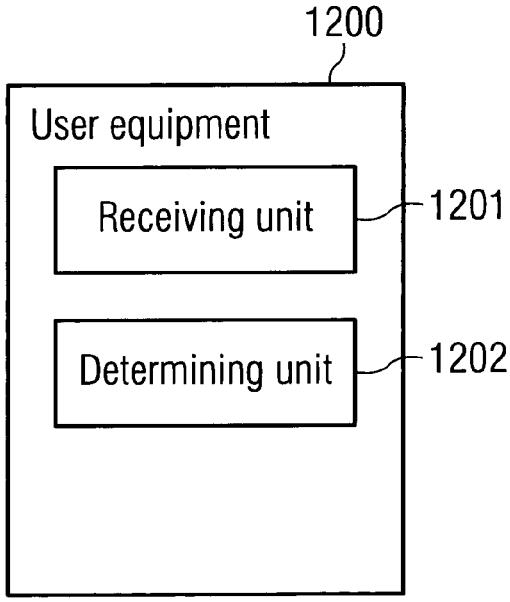
1200
User equipment
Receiving unit
1201
Determining unit
1202