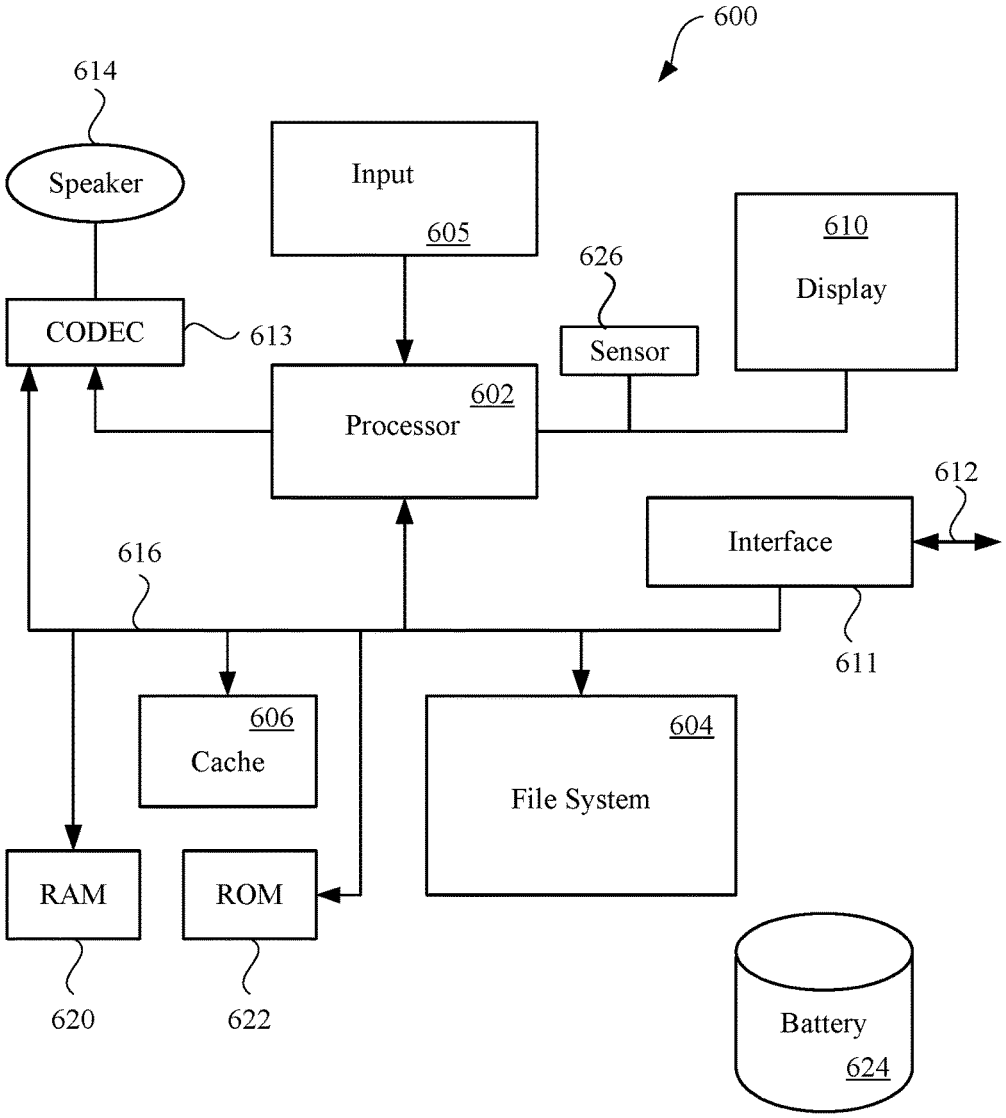
600
614
Speaker
Input
605
610
Display
626
Sensor
CODEC
613
Processor
602
612
Interface
616
611
606
Cache
604
File System
RAM
ROM
620
622
Battery
624

FIG. 6