US 20140334649A1

(19) United States

(12) Patent Application Publication

Fromel et al.

(10) Pub. No.: US 2014/0334649 A1

(43) Pub. Date: Nov. 13, 2014

(54) DUST SHIELDING APPARATUS

(75) Inventors: **Andreas Fromel**, Kirchseeon (DE); **Jani Kuivalainen**, Ulm (DE)

(73) Assignee: **Nokia Corporation**, Espoo (FI)

(21) Appl. No.: **14/128,826**

(22) PCT Filed: **Jul. 1, 2011**

(86) PCT No.: **PCT/IB2011/052921**

§ 371 (c)(1), (2), (4) Date: **May 2, 2014**

Publication Classification

(51) **Int. Cl.**
H04R 1/02 (2006.01)
H04R 1/12 (2006.01)

(52) **U.S. Cl.**
CPC . *H04R 1/023* (2013.01); *H04R 1/12* (2013.01)
USPC **381/189**

(57) **ABSTRACT**
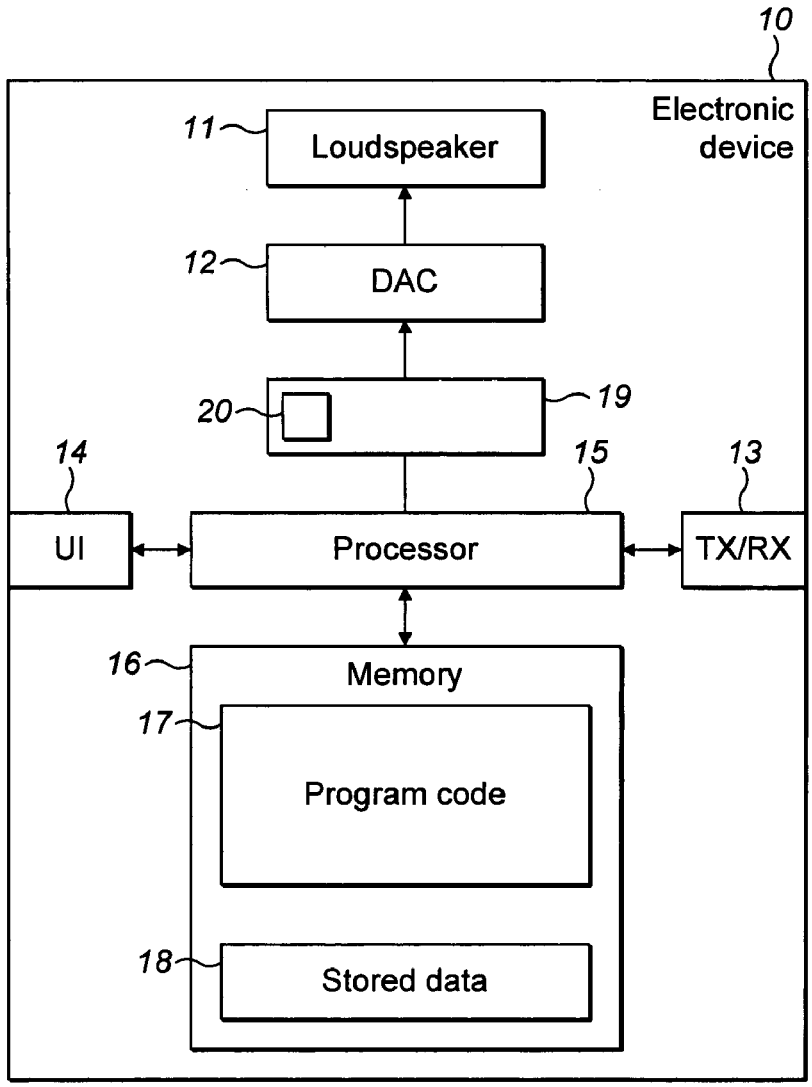
An apparatus comprising at least one sound aperture configured to be acoustically coupled to an air displacement component, wherein the at least one sound aperture configured to produce a magnetically shielded region to form a trap for particles.