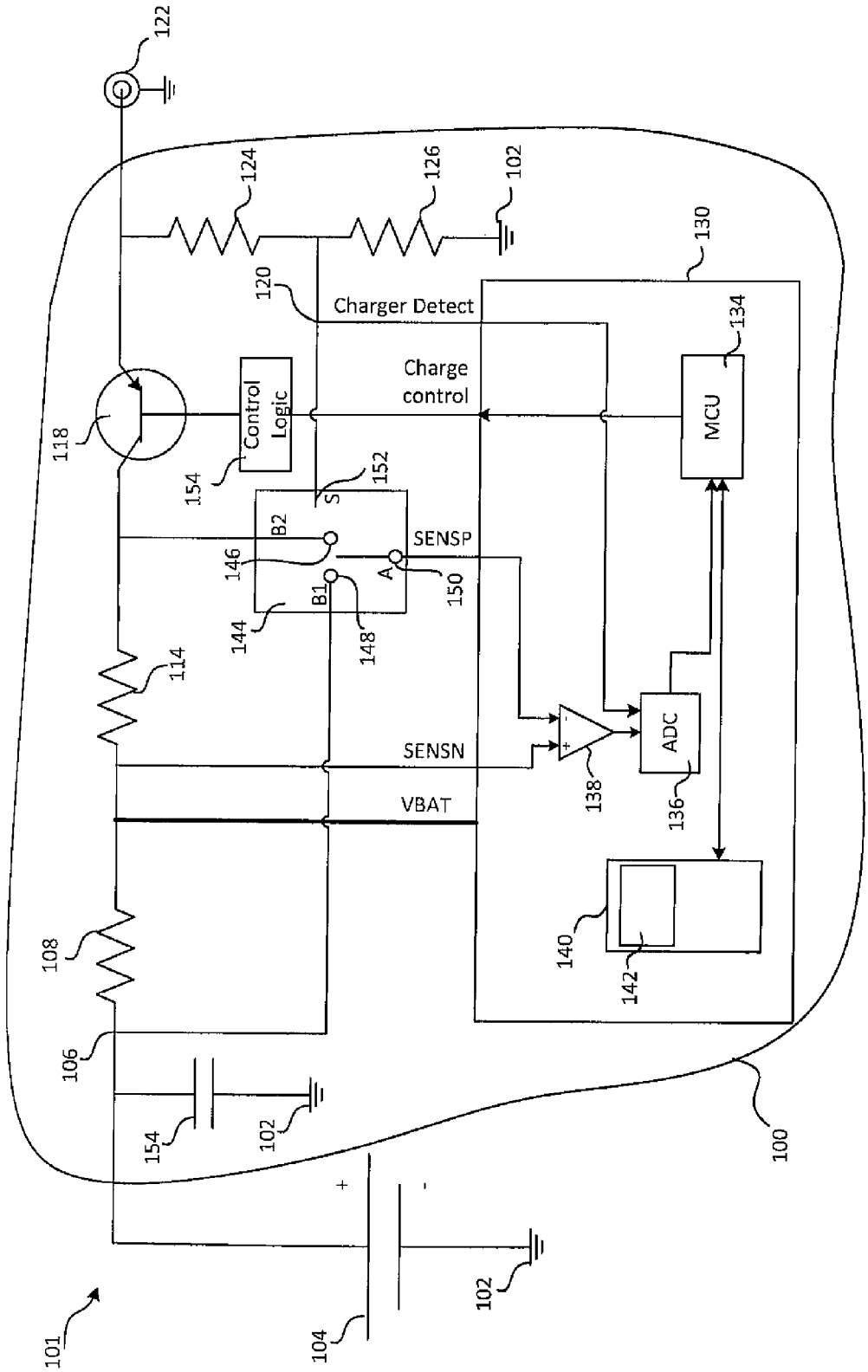
122
124
126
102
130
120
Charger Detect
134
Charge
control
MCU
118
Control
Logic
154
152
S
B2
SENSP
146
A
150
B1
144
148
114
ADC
SENSN
138
VBAT
136
108
140
142
106
154
102
100
101
104
102

Figure 1