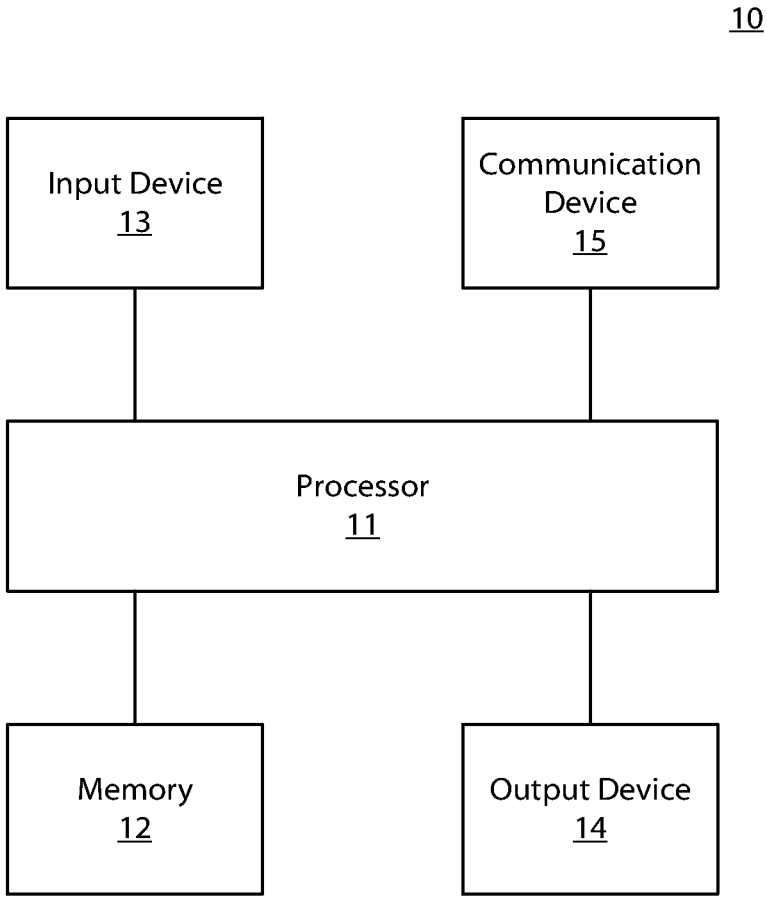
10
Input Device
13
Communication
Device
15
Processor
11
Memory
12
Output Device
14

FIG. 1