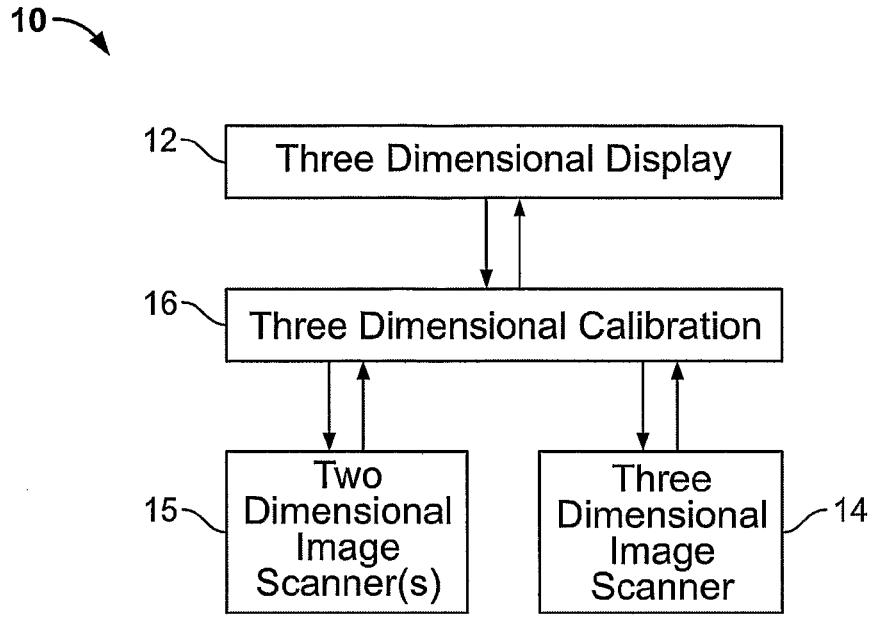
10
12
Three Dimensional Display
16
Three Dimensional Calibration
15
Two Dimensional Image Scanner(s)
Three Dimensional Image Scanner
14

FIG. 1

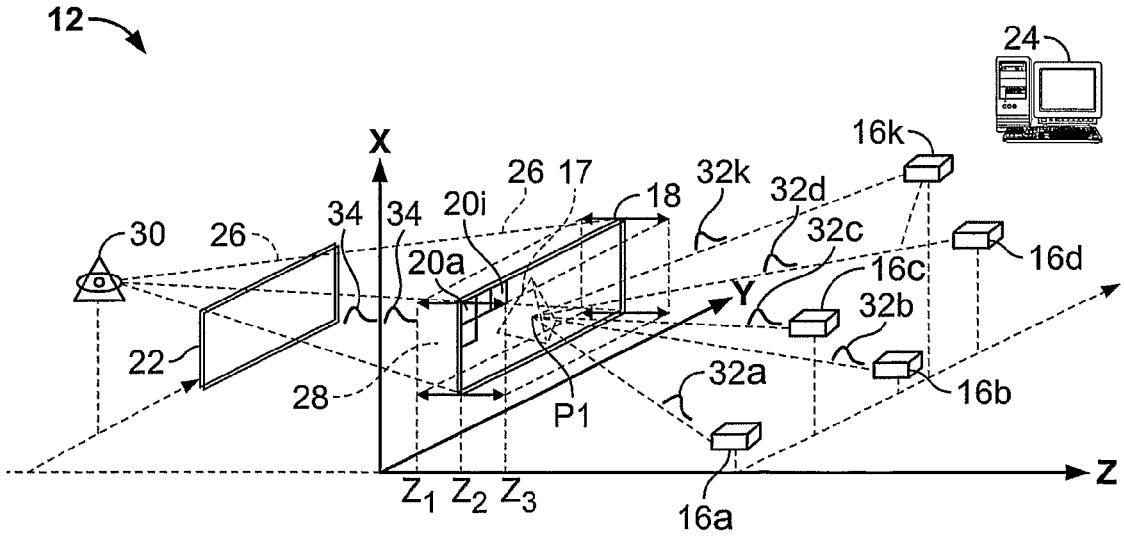
12
24
X
16k
26 17
32k
32d
18
34
34
20i
30
26
32c
16d
20a
16c
Y
32b
22
32a
16b
28
P1
Z
Z1 Z2 Z3
16a

FIG. 2