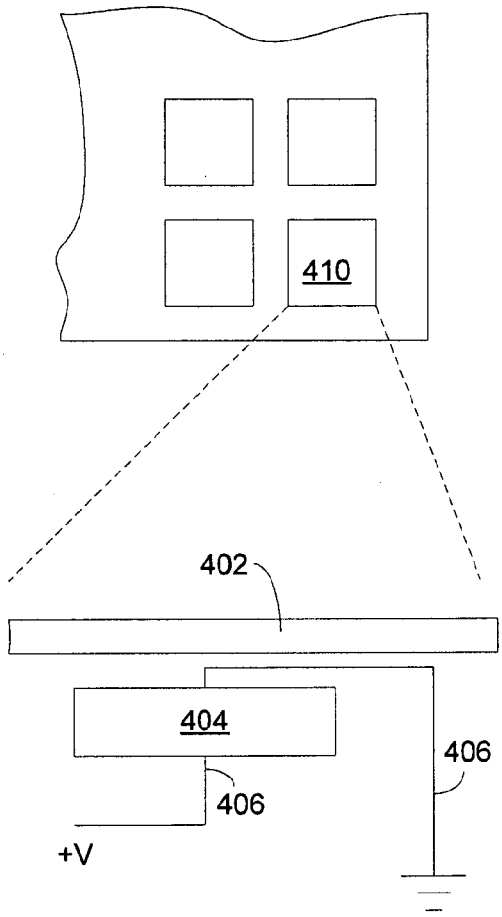

FIG 4(a)

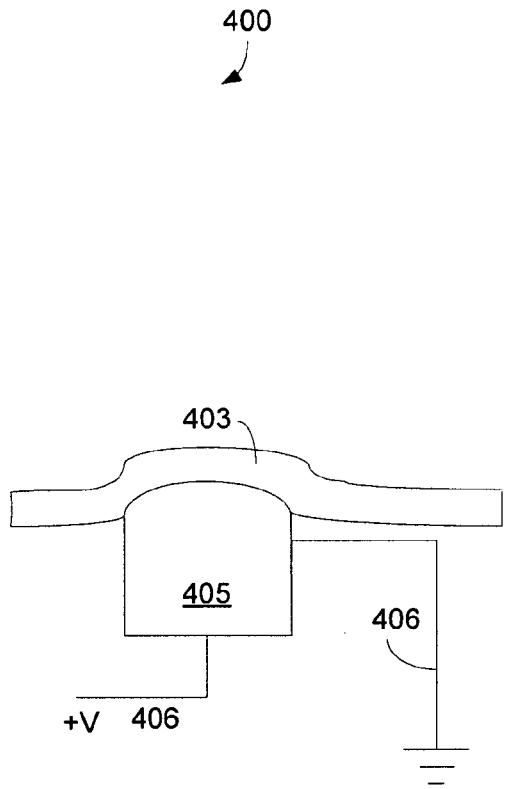

FIG 4(b)