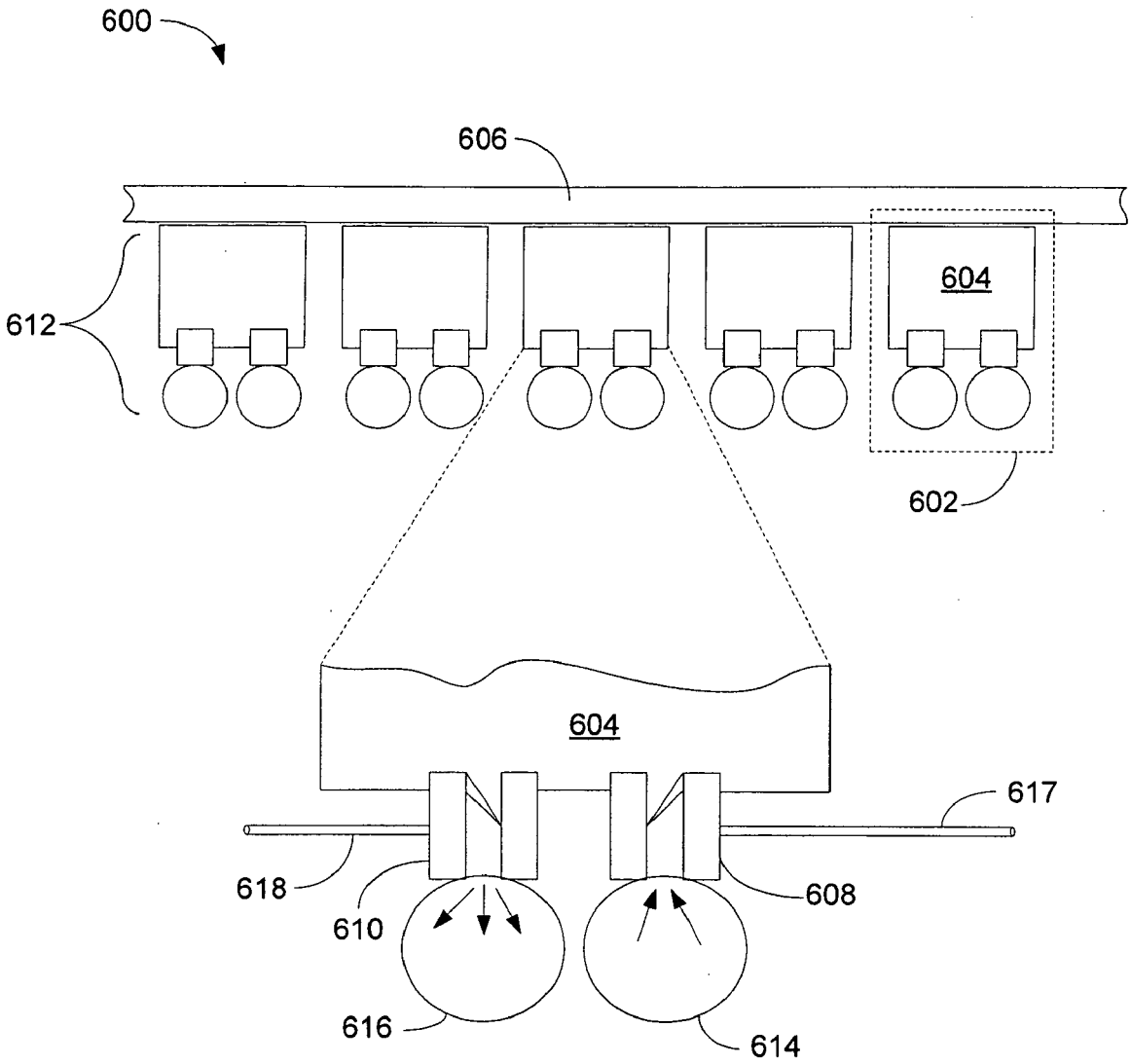

FIG 6 (a)