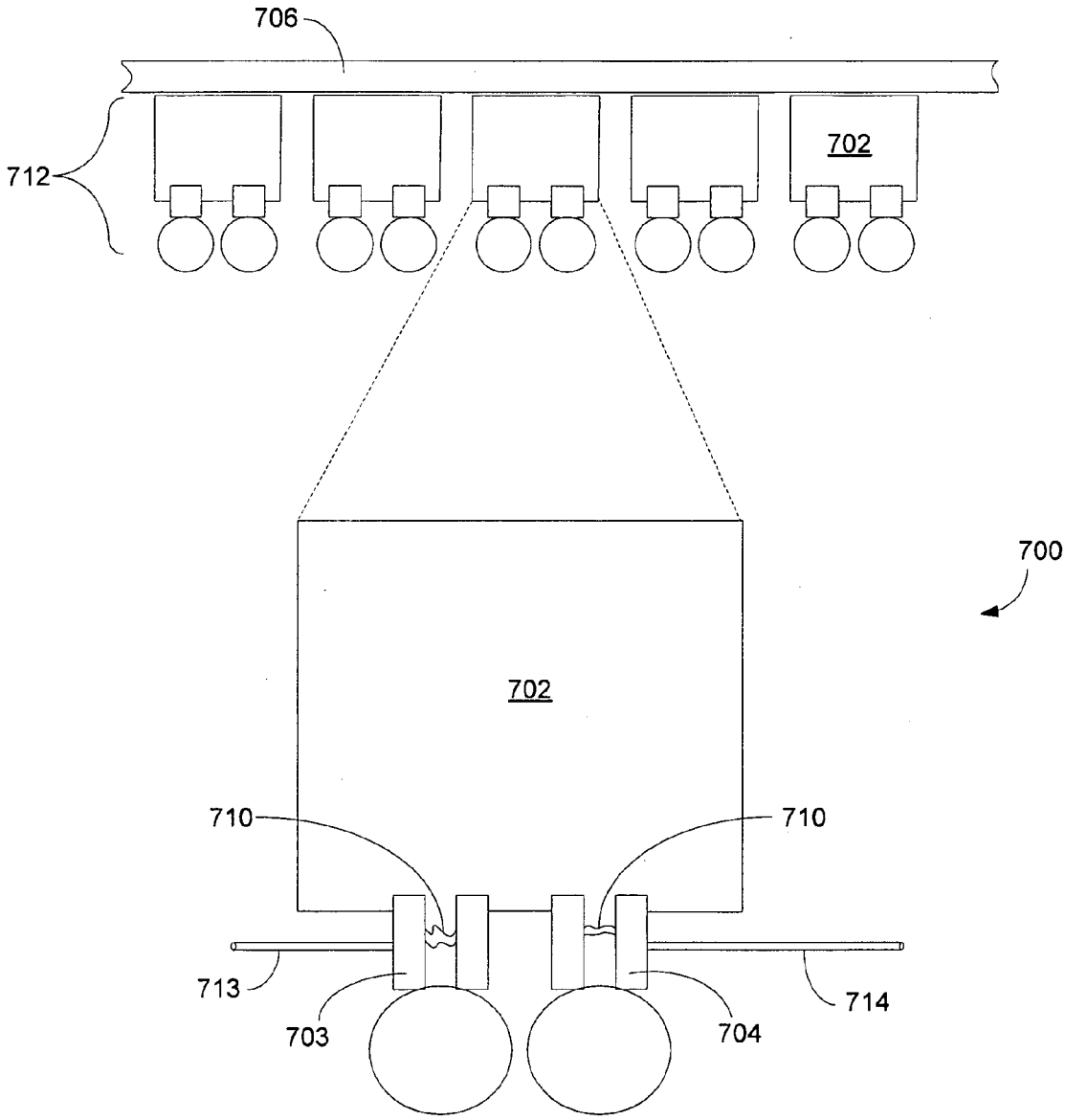

FIG 7