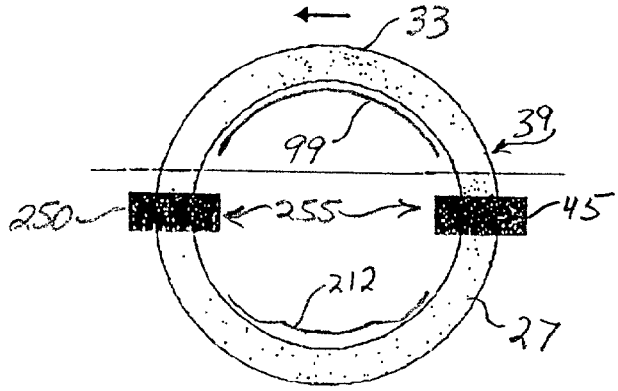

Figure 25

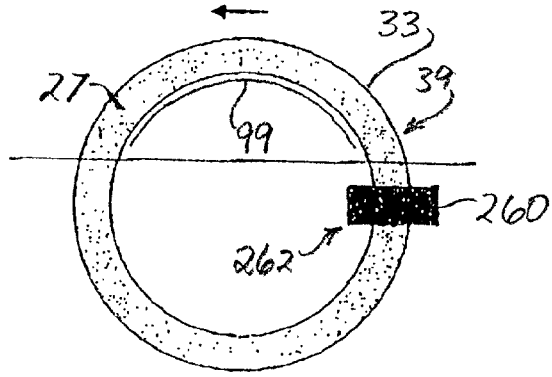

Figure 26

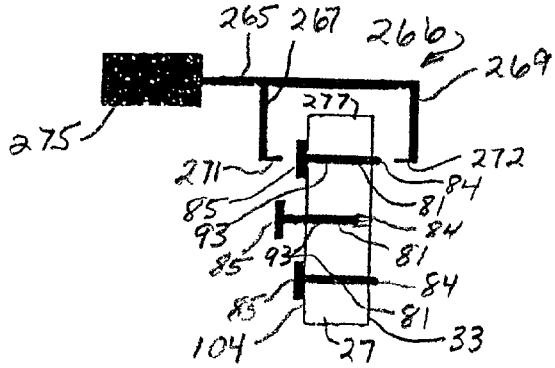

Figure 27

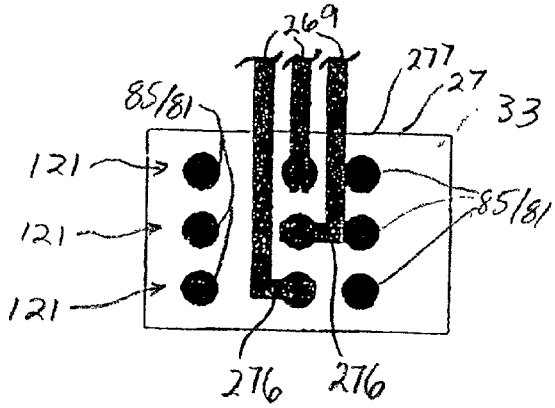

Figure 28