FIG. 1 (PRIOR ART)

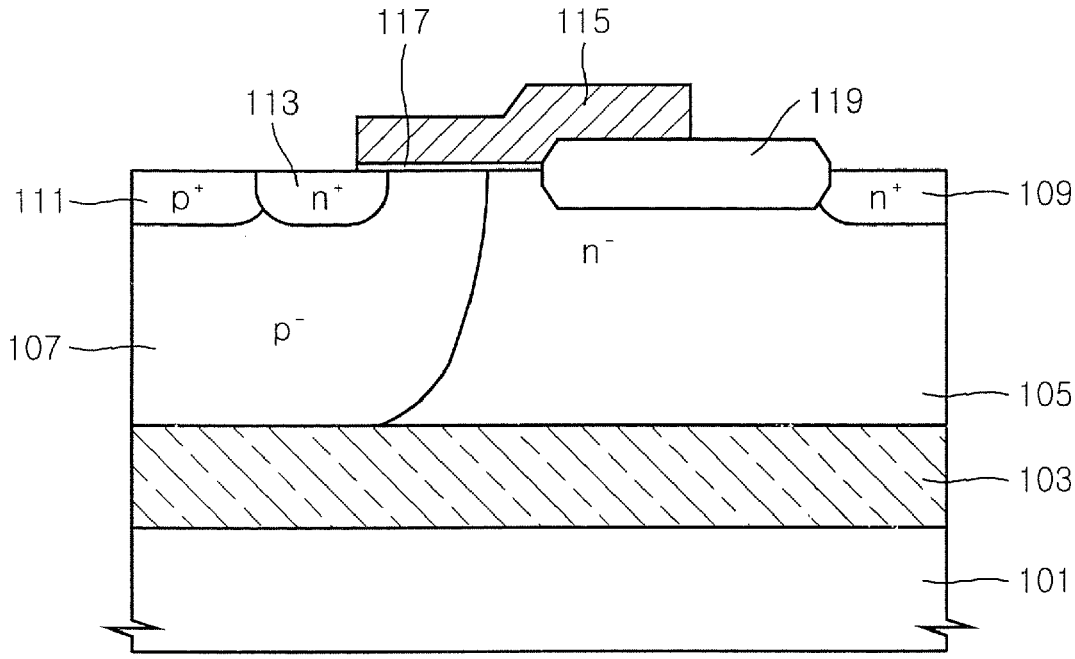
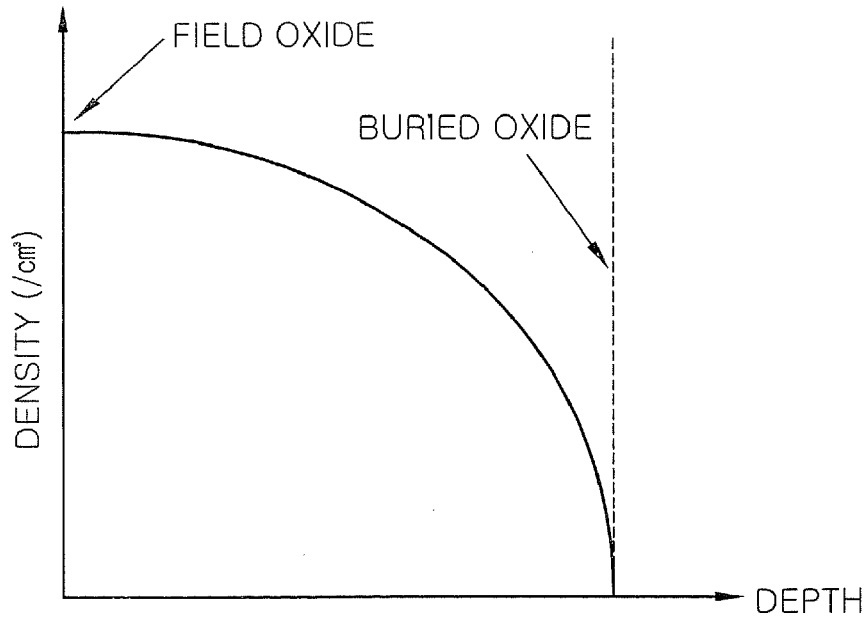
FIG. 2 (PRIOR ART)