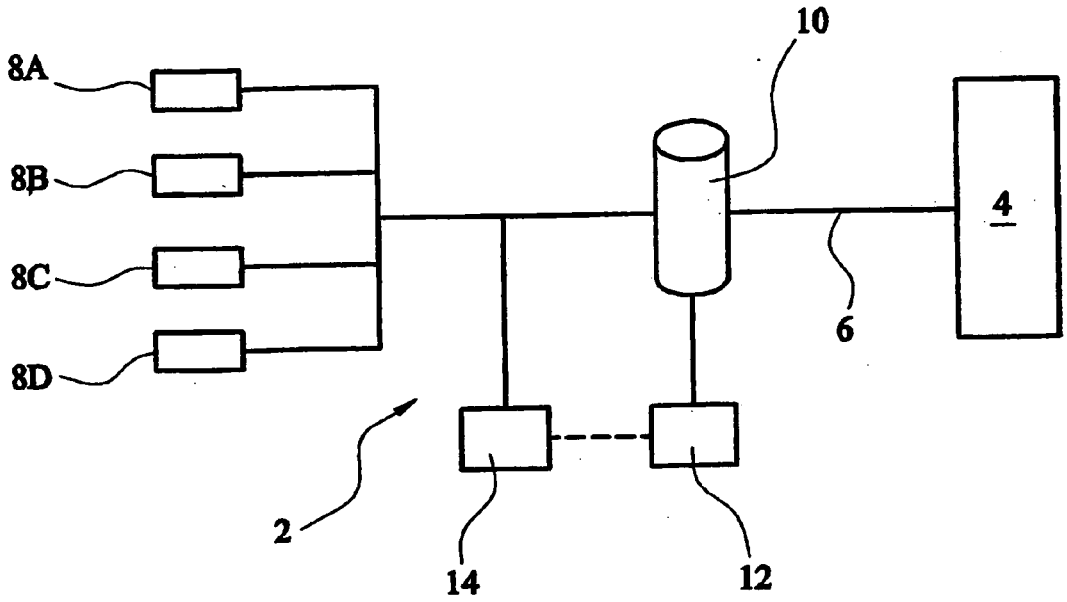
8A
8B
8C
8D
10
4
6
2
14
12

FIG. 1

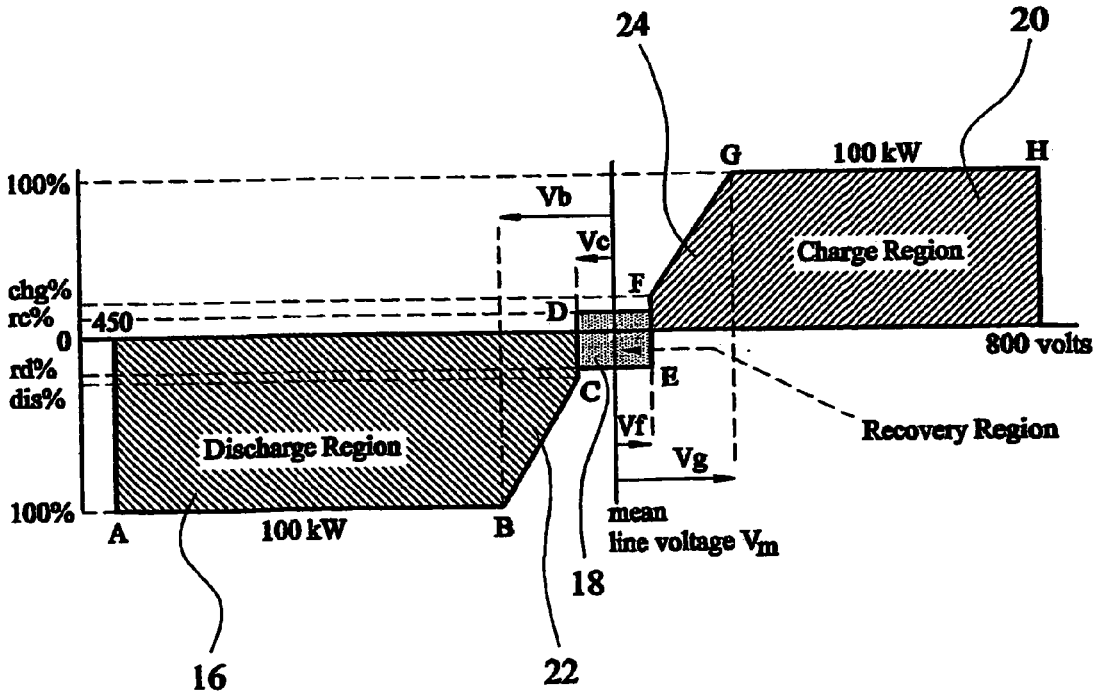
24
20
G
100 kW
H
100%
Vb
Vc
Charge Region
chg%
rc%
F
450
D
0
800 volts
rd%
dis%
E
C
Recovery Region
Vf
Vg
Discharge Region
100%
A
100 kW
B
mean
line voltage V_m
18
16
22

FIG. 2