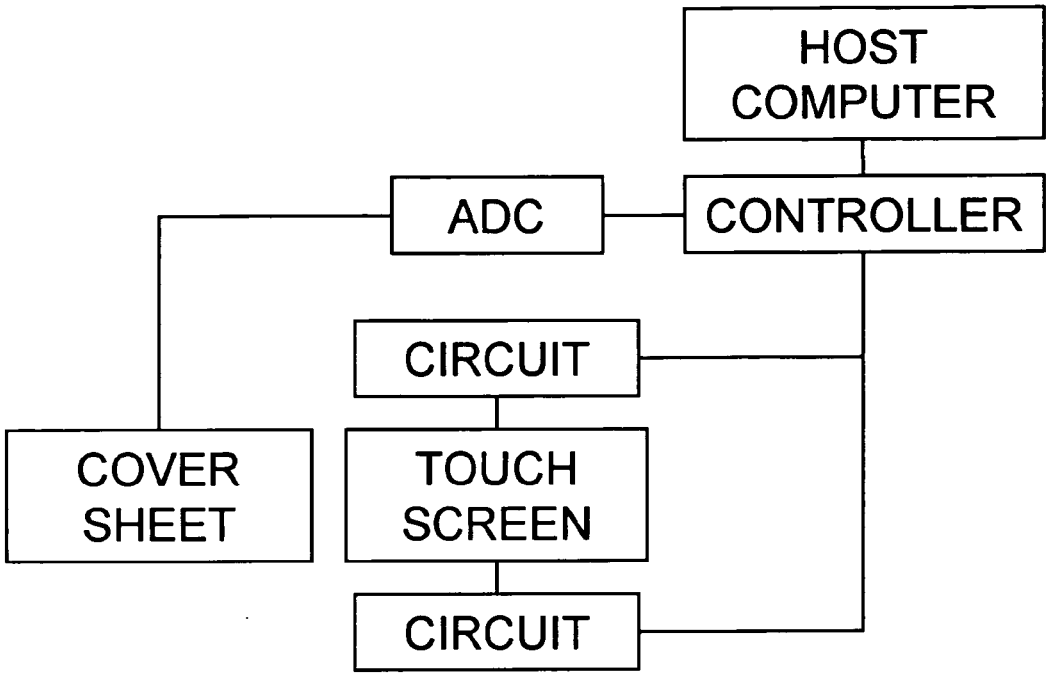
HOST
COMPUTER
ADC
CONTROLLER
CIRCUIT
COVER
SHEET
TOUCH
SCREEN
CIRCUIT

Fig. 3