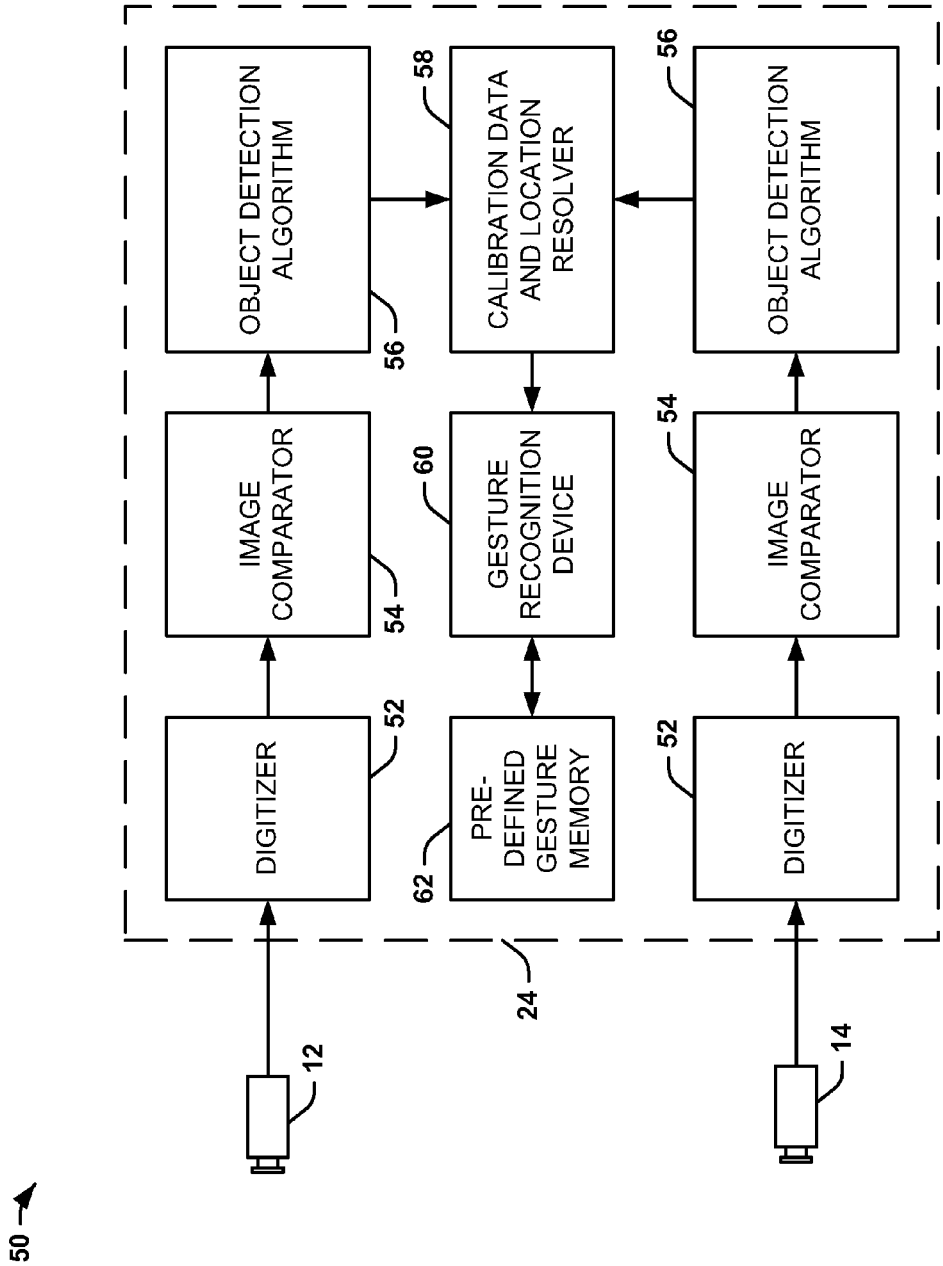
50
12
14
24
DIGITIZER
52
IMAGE COMPARATOR
54
OBJECT DETECTION ALGORITHM
56
PRE-DEFINED GESTURE MEMORY
62
GESTURE RECOGNITION DEVICE
60
CALIBRATION DATA AND LOCATION RESOLVER
58
DIGITIZER
52
IMAGE COMPARATOR
54
OBJECT DETECTION ALGORITHM
56

FIG. 2