US 20160220052A1

(19) United States

(12) Patent Application Publication

CHUA et al.

(10) Pub. No.: US 2016/0220052 A1

(43) Pub. Date: Aug. 4, 2016

(54) **STAND FOR SUPPORTING A GARMENT HANGER**

(71) Applicant: **KONINKLIJKE PHILIPS N.V.**, Eindhoven (NL)

(72) Inventors: **HEE KENG CHUA**, EINDHOVEN (NL); **CHIAK NGEE DOMINIC LIM**, EINDHOVEN (NL); **VALIYAMBATH KRISHNAN MOHANKUMA**, EINDHOVEN (NL)

(73) Assignee: **Koninklijke Philips N.V.**, Eindhoven (NL)

(21) Appl. No.: **15/025,298**

(22) PCT Filed: **Sep. 22, 2014**

(86) PCT No.: **PCT/EP2014/070080**

§ 371 (c)(1),
(2) Date: **Mar. 28, 2016**

(30) **Foreign Application Priority Data**

Sep. 30, 2013 (EP) 13186608.9

Publication Classification

(51) **Int. Cl.**

A47G 25/06	(2006.01)
D06F 73/00	(2006.01)
F16B 2/18	(2006.01)
F16M 11/04	(2006.01)
F16B 1/00	(2006.01)
A47G 25/14	(2006.01)
F16B 2/06	(2006.01)

(52) **U.S. Cl.**

CPC ***A47G 25/0664*** (2013.01); ***A47G 25/14*** (2013.01); ***D06F 73/00*** (2013.01); ***F16B 2/065*** (2013.01); ***F16M 11/041*** (2013.01); ***F16B 1/00*** (2013.01); ***F16B 2/18*** (2013.01); *F16B 2001/0035* (2013.01)

(57) **ABSTRACT**
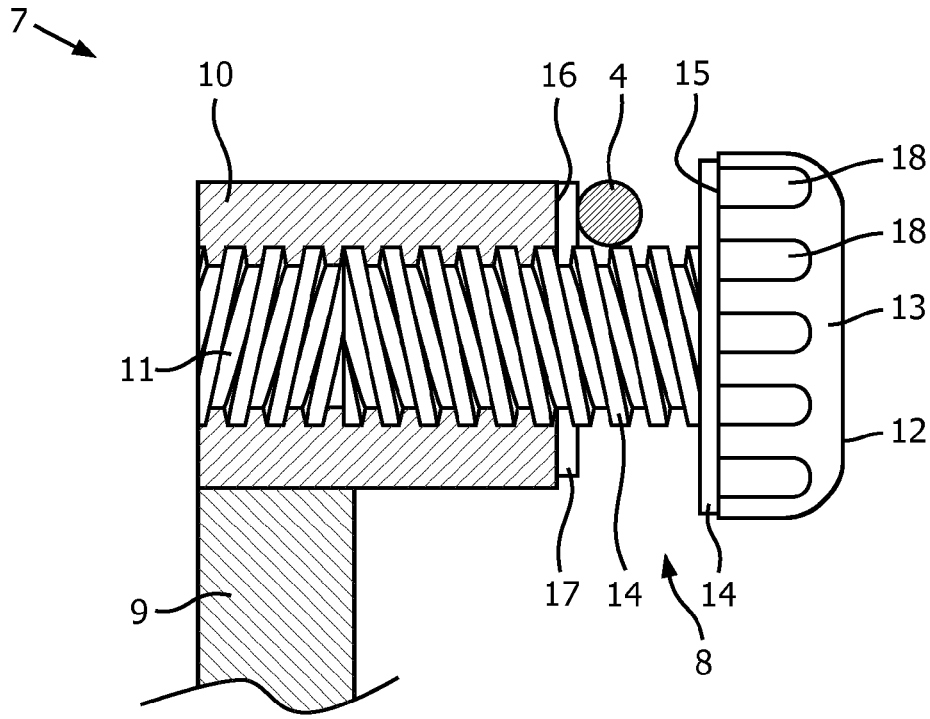
The present application relates to a stand for supporting a garment hanger. The stand comprises a supporting element (**14**,**22**,**32**) on which a garment hanger is hung, and a clamp (**8**) operable to releasably support the garment hanger in a fixed orientation after the garment hanger has been hung on said supporting element (**14**,**22**,**32**).