FIG.4

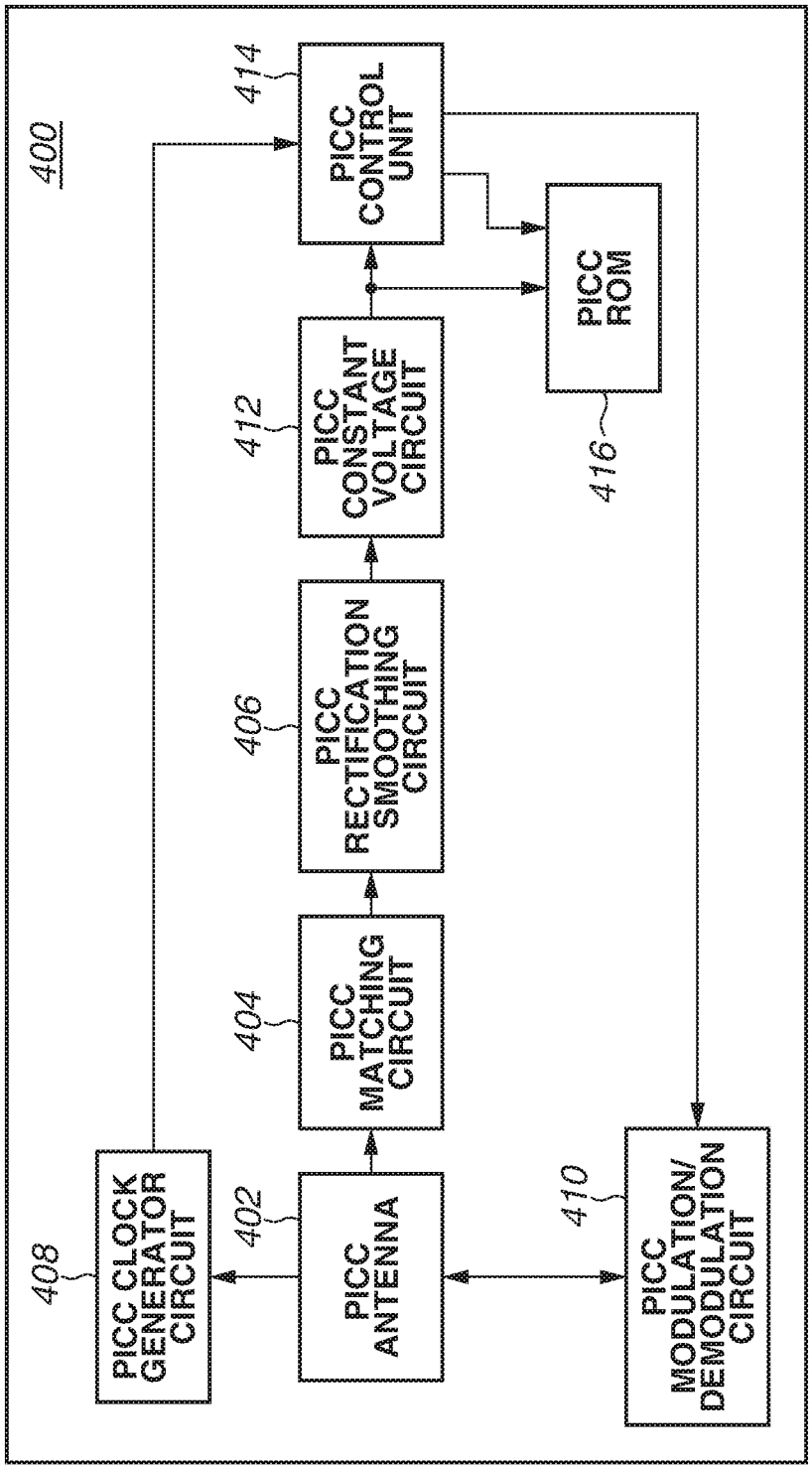
400
PICC CLOCK GENERATOR CIRCUIT
408
PICC ANTENNA
402
PICC MATCHING CIRCUIT
404
PICC RECTIFICATION SMOOTHING CIRCUIT
406
PICC CONSTANT VOLTAGE CIRCUIT
412
PICC CONTROL UNIT
414
PICC ROM
416
PICC MODULATION/ DEMODULATION CIRCUIT
410