FIG. 3

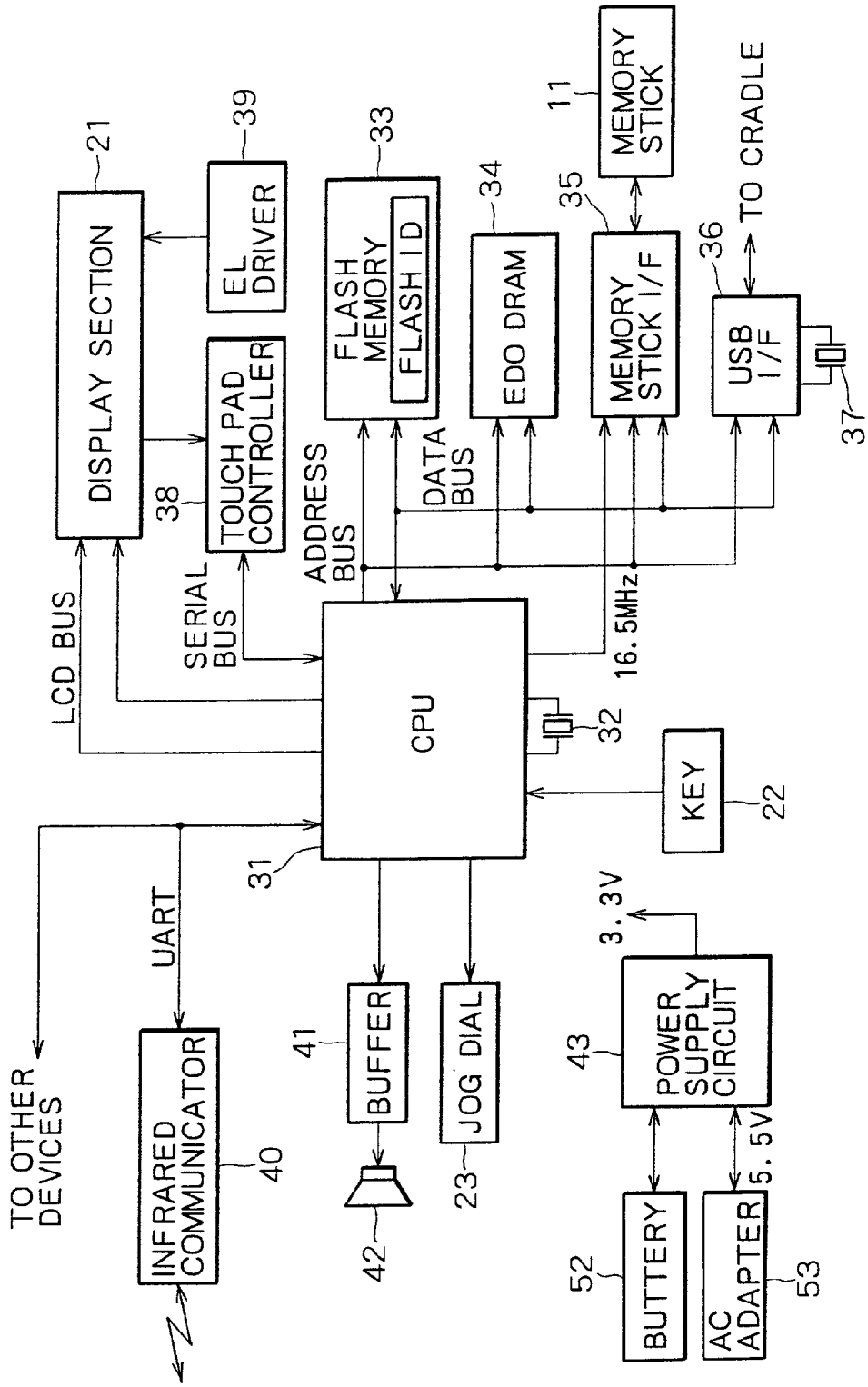
DISPLAY SECTION
21
EL DRIVER
39
TOUCH PAD CONTROLLER
38
FLASH MEMORY
FLASH ID
33
EDO DRAM
34
MEMORY STICK
11
MEMORY STICK I/F
35
USB I/F
36
TO CRADLE
37
LCD BUS
SERIAL BUS
ADDRESS BUS
DATA BUS
16.5MHz
CPU
31
32
KEY
22
UART
TO OTHER DEVICES
INFRARED COMMUNICATOR
40
BUFFER
41
42
JOG DIAL
23
POWER SUPPLY CIRCUIT
43
3.3V
5.5V
BUTTERY
52
AC ADAPTER
53