FIG. 4

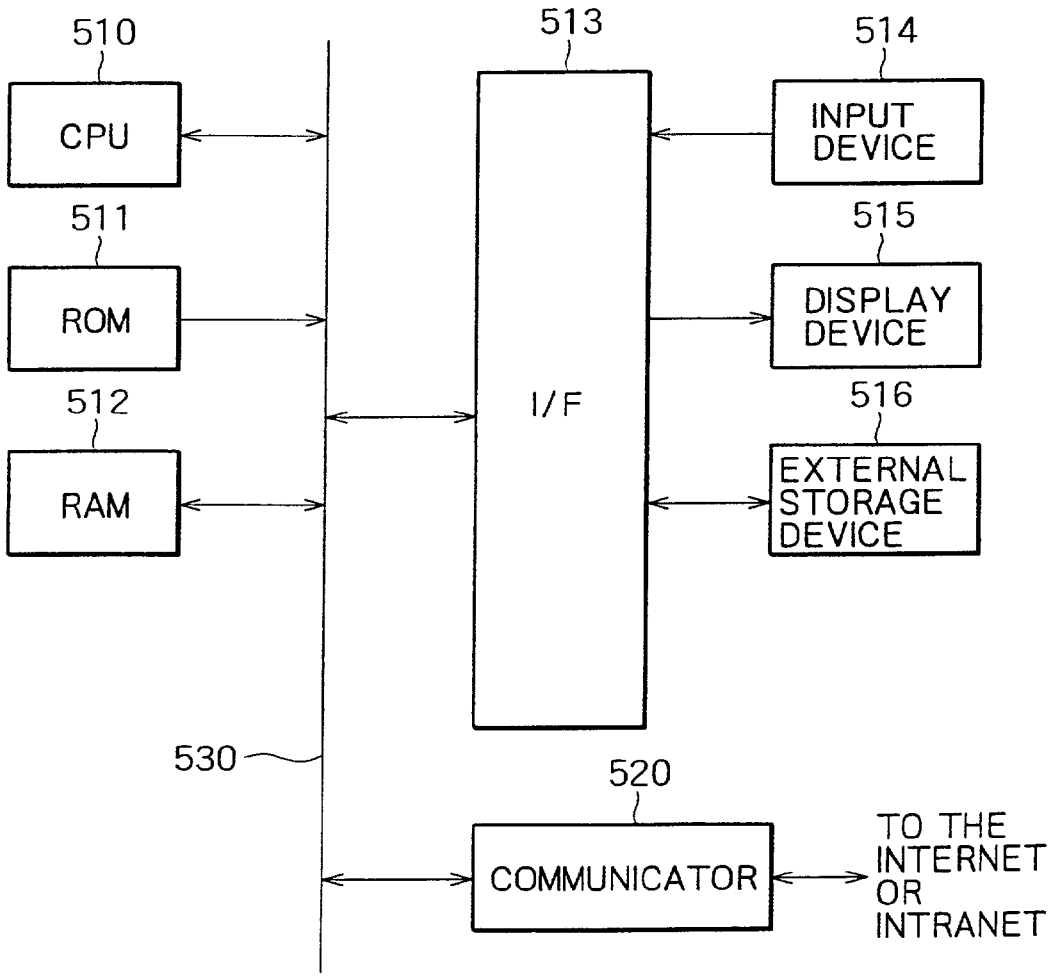
510
CPU
511
ROM
512
RAM
513
I/F
514
INPUT DEVICE
515
DISPLAY DEVICE
516
EXTERNAL STORAGE DEVICE
530
520
COMMUNICATOR
TO THE INTERNET OR INTRANET