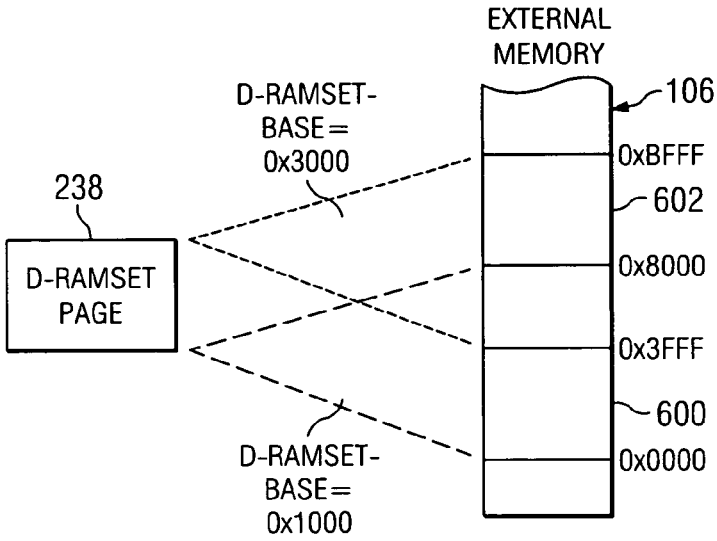
EXTERNAL MEMORY
106
D-RAMSET-BASE= 0x3000
0xBFFF
238
602
D-RAMSET PAGE
0x8000
0x3FFF
600
D-RAMSET-BASE= 0x1000
0x0000

FIG. 9

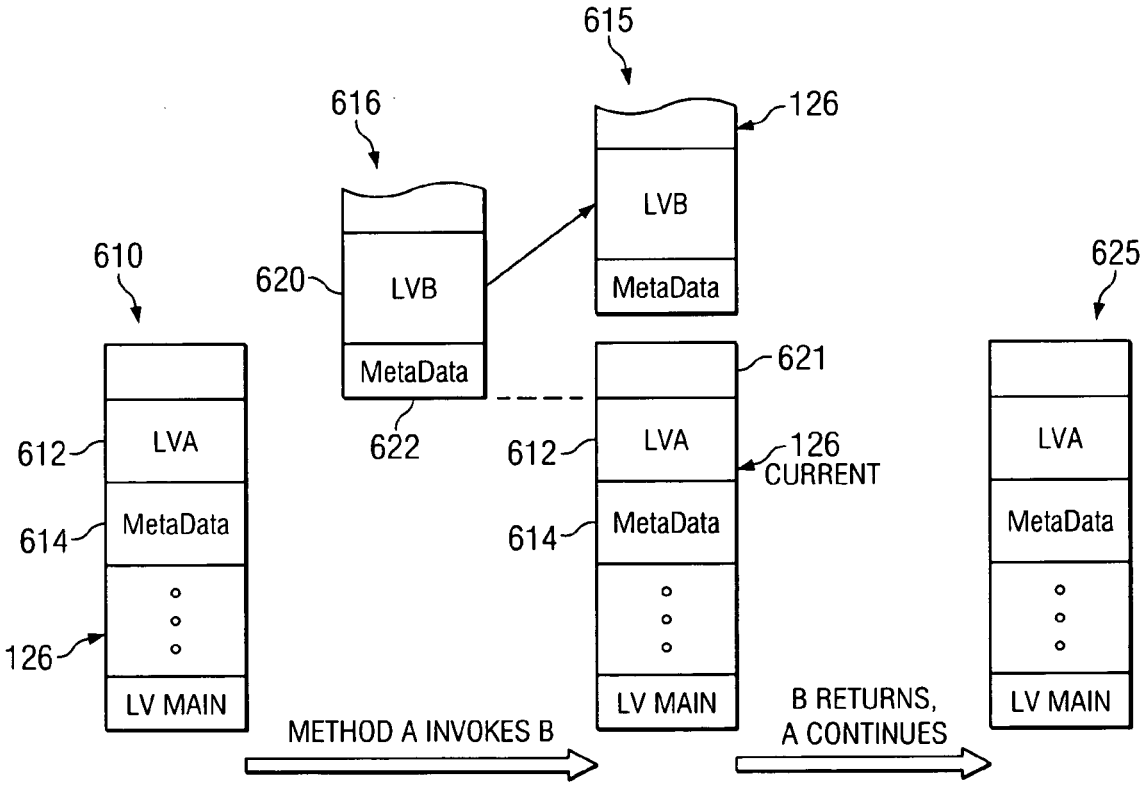
615
616
126
LVB
MetaData
610
620
LVB
MetaData
625
621
612
LVA
622
612
LVA
126
CURRENT
LVA
614
MetaData
614
MetaData
MetaData
126
LV MAIN
LV MAIN
LV MAIN
METHOD A INVOKES B
B RETURNS, A CONTINUES

FIG. 10