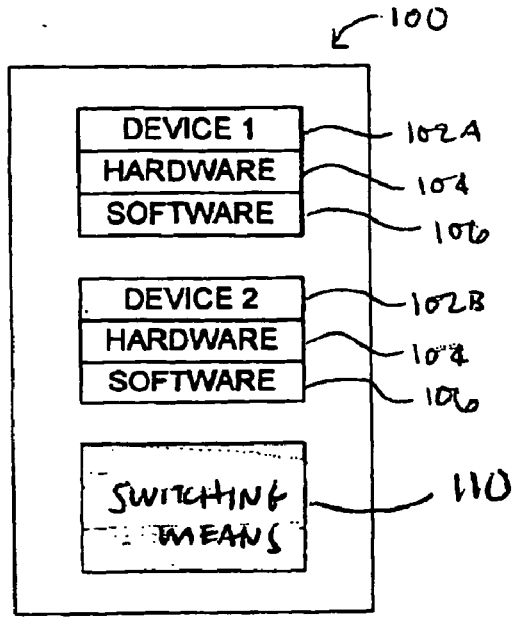
100
DEVICE 1
HARDWARE
SOFTWARE
102A
104
106
DEVICE 2
HARDWARE
SOFTWARE
102B
104
106
SWITCHING MEANS
110

FIG. 2

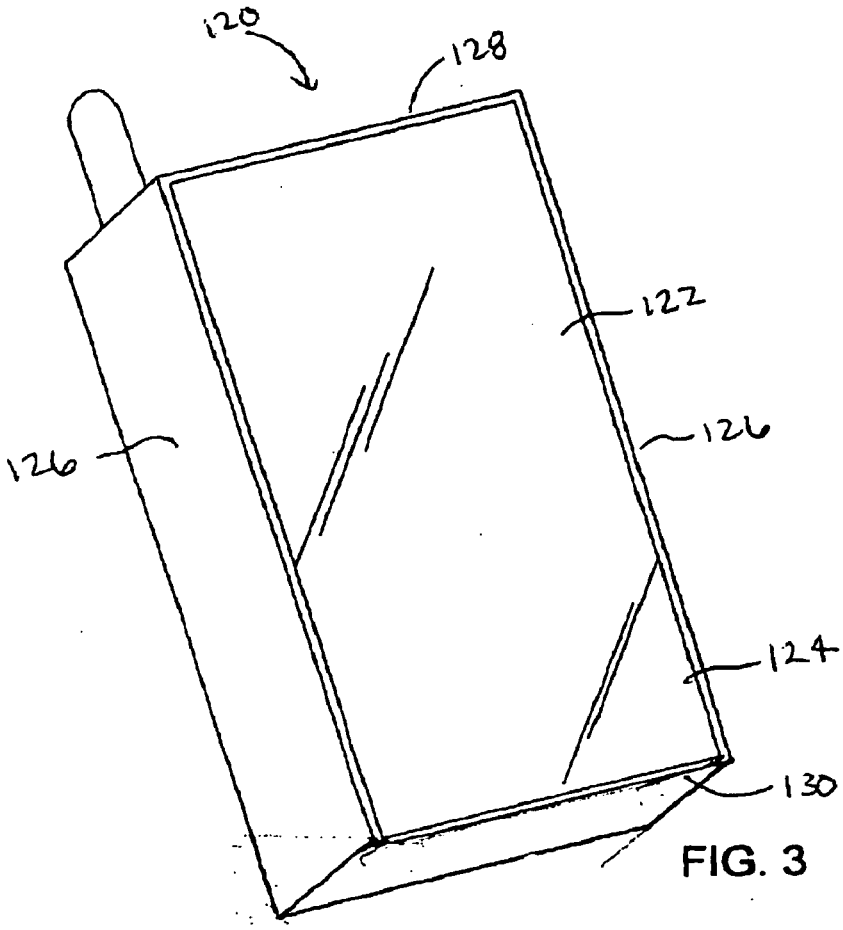
120
128
122
126
126
124
130

FIG. 3