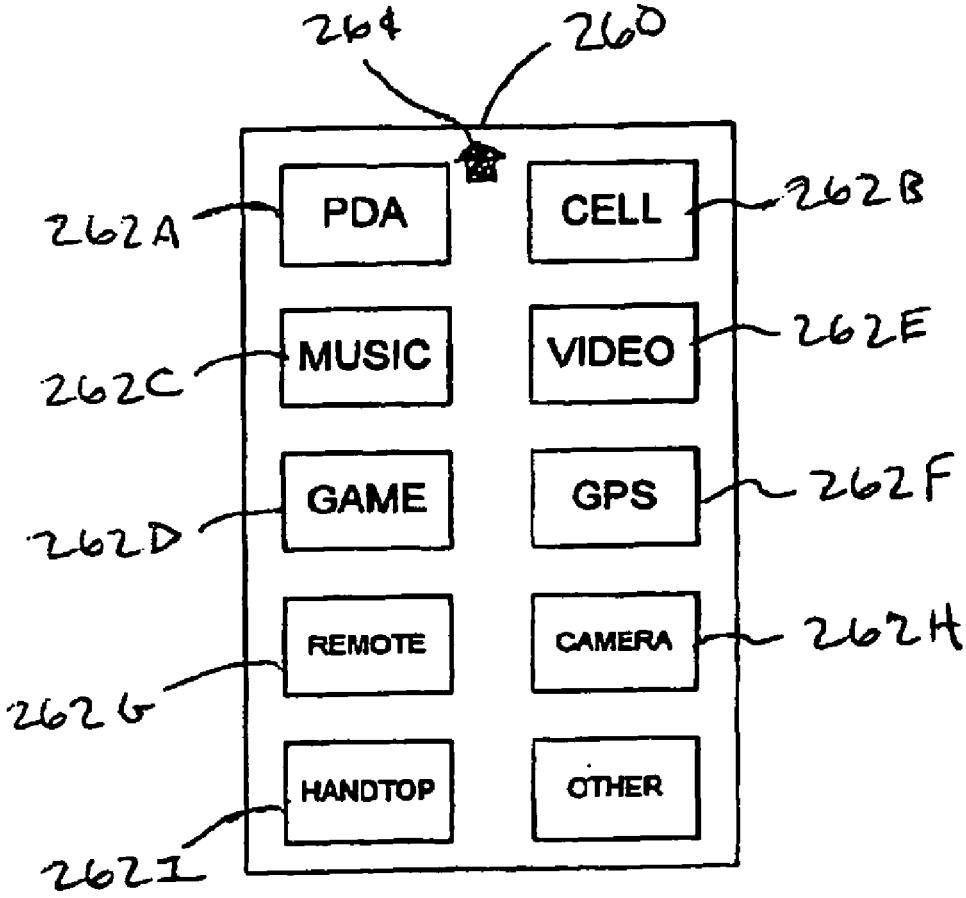
264
260
262A
PDA
CELL
262B
262C
MUSIC
VIDEO
262E
262D
GAME
GPS
262F
REMOTE
CAMERA
262H
262G
HANDTOP
OTHER
262I

FIG. 18