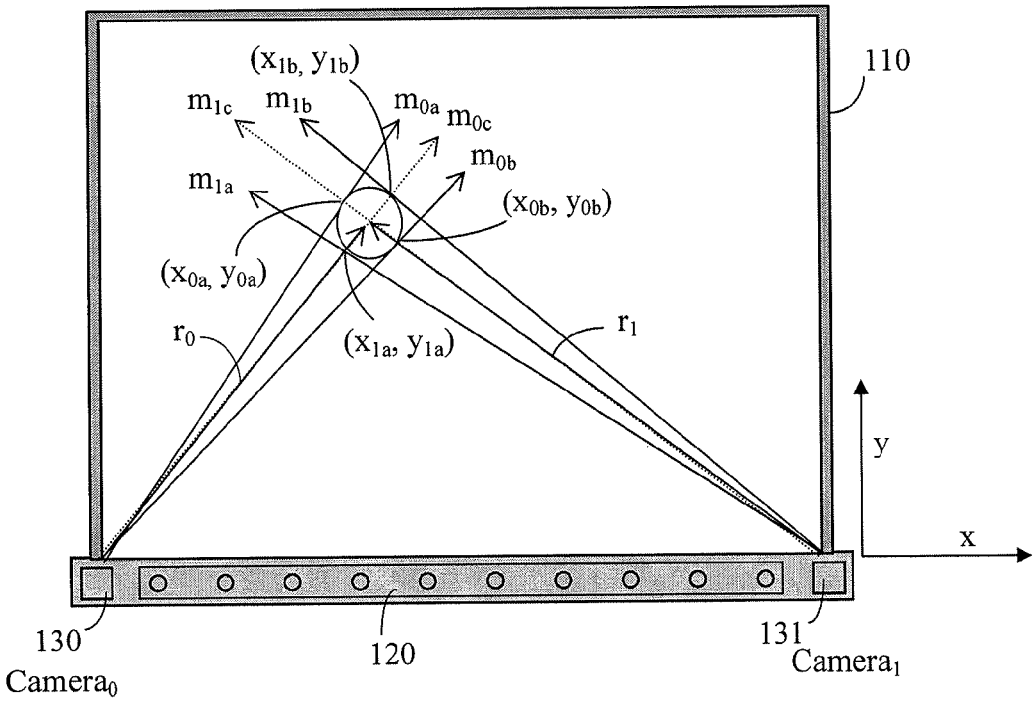

Figure 5

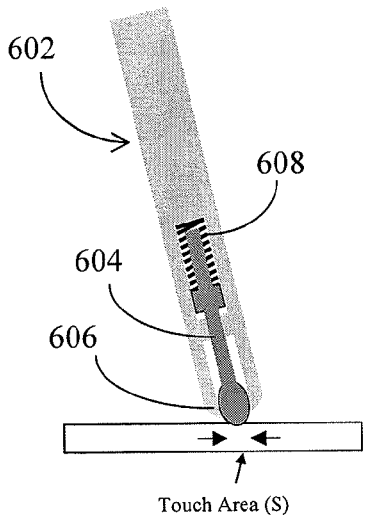

Figure 6A

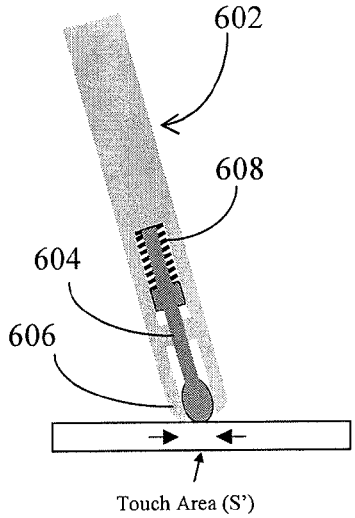

Figure 6B