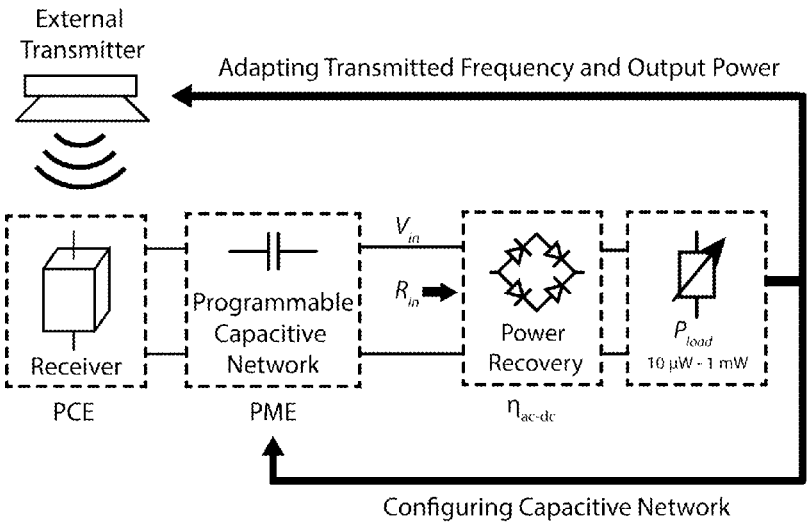
External
Transmitter
Adapting Transmitted Frequency and Output Power
Receiver
PCE
Programmable
Capacitive
Network
PME
V_{in}
R_{in}
Power
Recovery
$\eta_{ac\text{-}dc}$
P_{load}
10 μW - 1 mW
Configuring Capacitive Network

FIG. 13

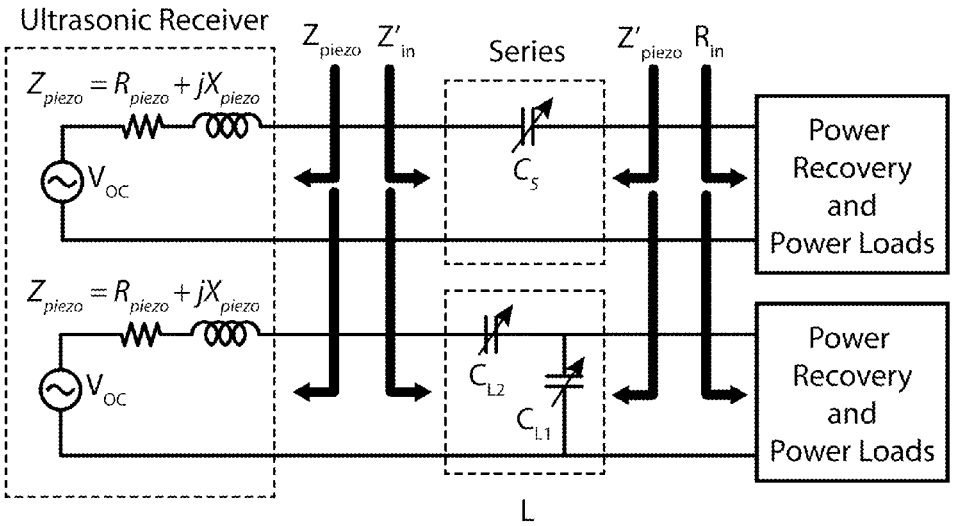
Ultrasonic Receiver
$Z_{piezo} = R_{piezo} + jX_{piezo}$
V_{OC}
$Z_{piezo} = R_{piezo} + jX_{piezo}$
V_{OC}
Z_{piezo}
Z'_{in}
Series
C_S
C_{L2}
C_{L1}
L
Z'_{piezo}
R_{in}
Power
Recovery
and
Power Loads
Power
Recovery
and
Power Loads

FIG. 14