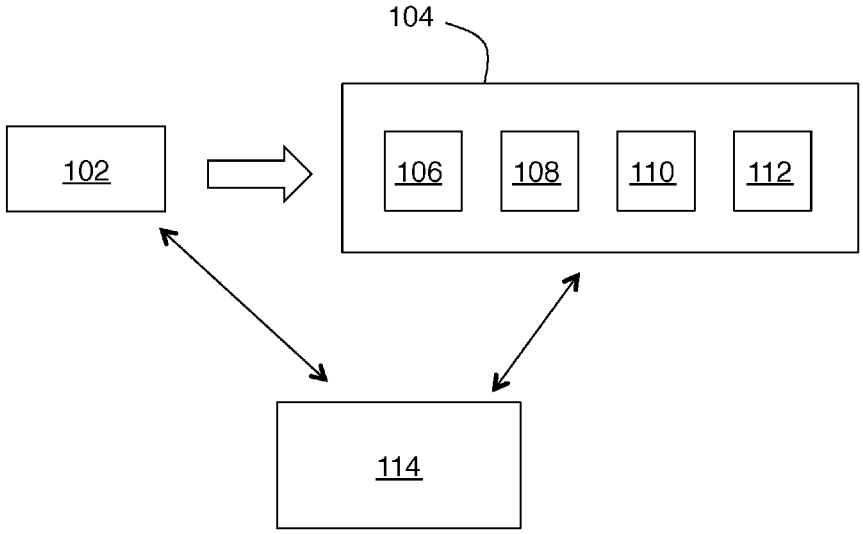
104
102
106
108
110
112
114

FIG. 1

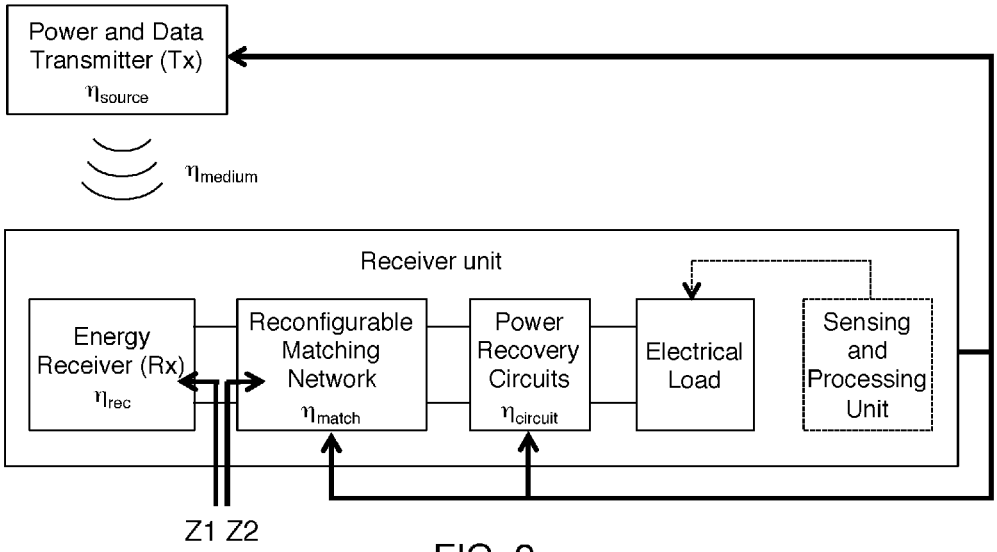
Power and Data Transmitter (Tx)
η_{source}
η_{medium}
Receiver unit
Energy Receiver (Rx)
η_{rec}
Reconfigurable Matching Network
η_{match}
Power Recovery Circuits
$\eta_{circuit}$
Electrical Load
Sensing and Processing Unit
Z1 Z2

FIG. 2