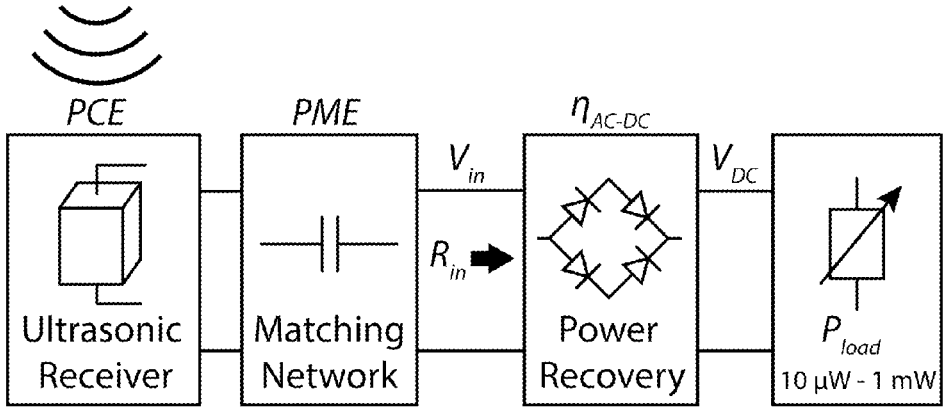
PCE
PME
η_{AC-DC}
V_{in}
V_{DC}
R_{in}
Ultrasonic Receiver
Matching Network
Power Recovery
P_{load}
10 μW - 1 mW

FIG. 8

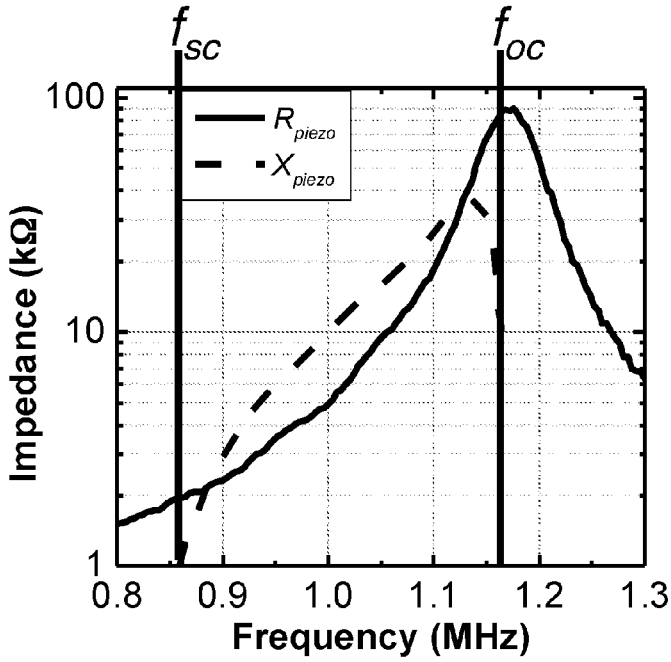
f_{sc}
f_{oc}
R_{piezo}
X_{piezo}
Impedance (kΩ)
100
10
1
0.8
0.9
1.0
1.1
1.2
1.3
Frequency (MHz)

FIG. 9