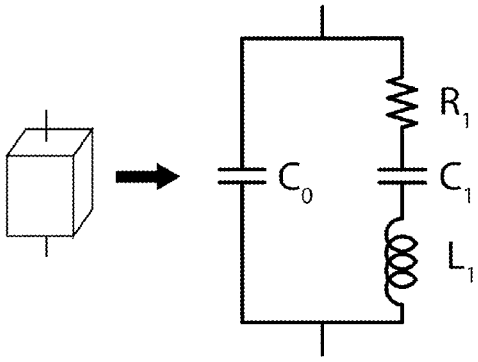

$$C_O = \varepsilon_0 \varepsilon_{33}^T (1 - k_{33}^2) \frac{w^2}{t}$$

$$C_1 = \frac{8 C_0 k_{33}^2}{\pi^2 - 8 k_{33}^2}$$

$$L_1 = \frac{1}{4\pi^2 f_{sc}^2 C_1}$$

$$R_1 = \frac{1}{8 k_{33}^2 f_{sc} C_0} \frac{Z_F + Z_B}{Z_C} \sim R_{sc}$$

FIG. 10

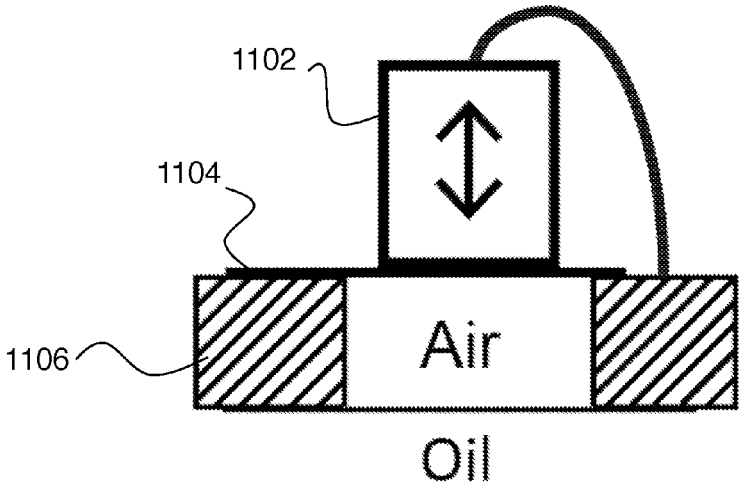

FIG. 11