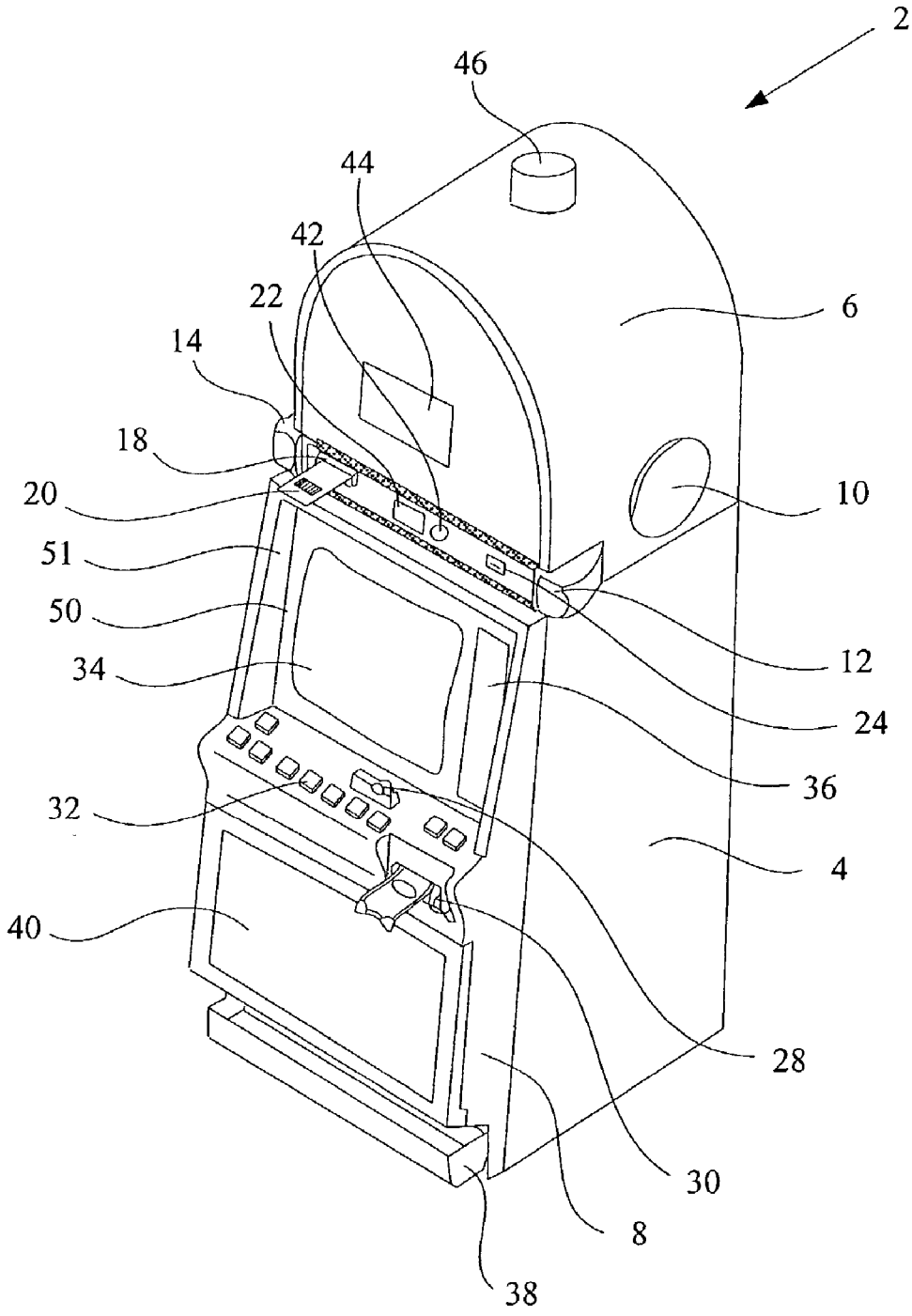


FIGURE 2