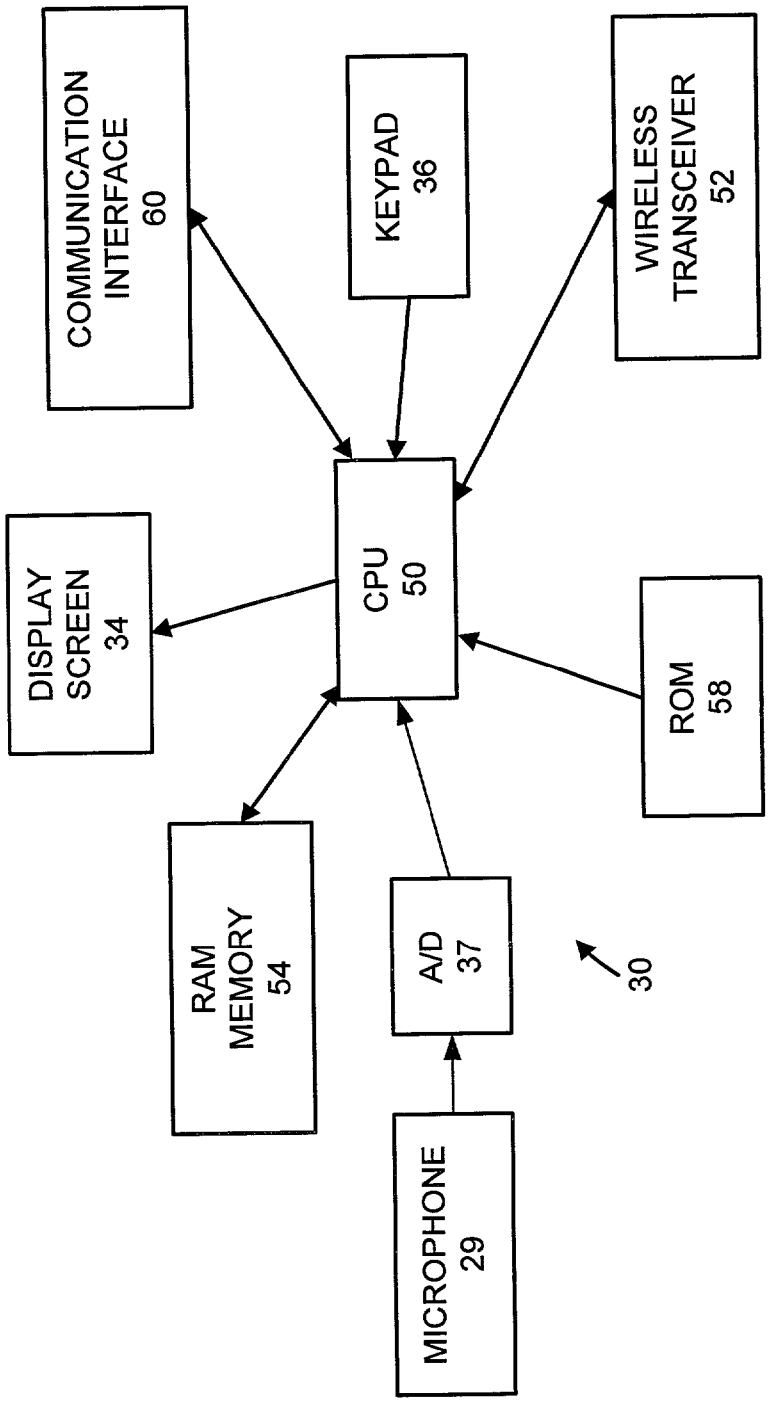
COMMUNICATION INTERFACE 60
KEYPAD 36
WIRELESS TRANSCEIVER 52
DISPLAY SCREEN 34
CPU 50
ROM 58
RAM MEMORY 54
A/D 37
30
MICROPHONE 29

FIG.2