FIG. 3

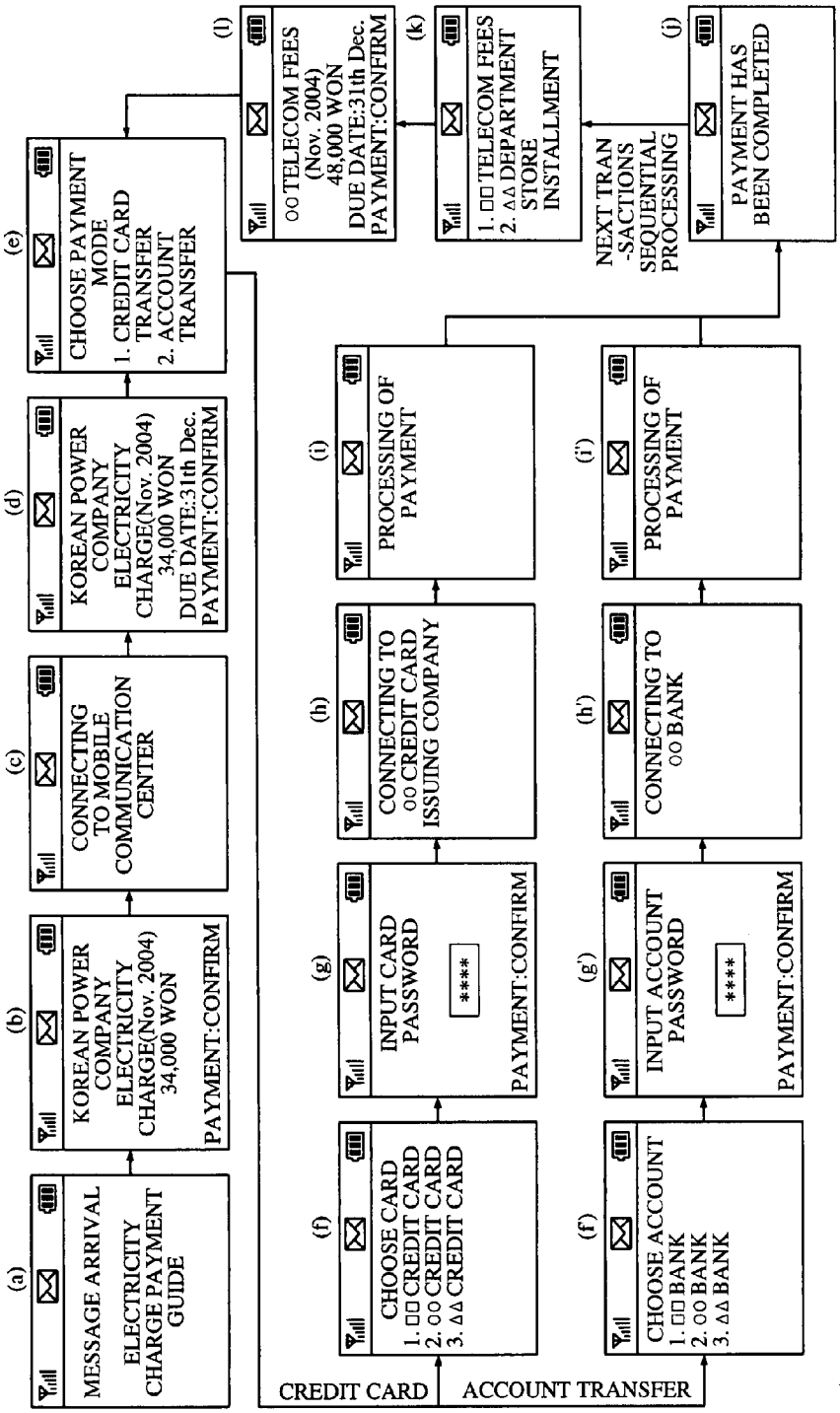
(a)
MESSAGE ARRIVAL
ELECTRICITY CHARGE PAYMENT GUIDE
(b)
KOREAN POWER COMPANY ELECTRICITY CHARGE(Nov. 2004) 34,000 WON
PAYMENT:CONFIRM
(c)
CONNECTING TO MOBILE COMMUNICATION CENTER
(d)
KOREAN POWER COMPANY ELECTRICITY CHARGE(Nov. 2004) 34,000 WON DUE DATE:31th Dec. PAYMENT:CONFIRM
(e)
CHOOSE PAYMENT MODE
1. CREDIT CARD TRANSFER
2. ACCOUNT TRANSFER
(f)
CHOOSE CARD
1. □□ CREDIT CARD
2. ○○ CREDIT CARD
3. ΔΔ CREDIT CARD
(g)
INPUT CARD PASSWORD
****
PAYMENT:CONFIRM
(h)
CONNECTING TO ○○ CREDIT CARD ISSUING COMPANY
(i)
PROCESSING OF PAYMENT
(f')
CHOOSE ACCOUNT
1. □□ BANK
2. ○○ BANK
3. ΔΔ BANK
(g')
INPUT ACCOUNT PASSWORD
****
PAYMENT:CONFIRM
(h')
CONNECTING TO ○○ BANK
(i')
PROCESSING OF PAYMENT
CREDIT CARD
ACCOUNT TRANSFER
(l)
○○ TELECOM FEES (Nov. 2004) 48,000 WON DUE DATE:31th Dec. PAYMENT:CONFIRM
(k)
1. □□ TELECOM FEES
2. ΔΔ DEPARTMENT STORE INSTALLMENT
NEXT TRAN -SACTIONS SEQUENTIAL PROCESSING
(j)
PAYMENT HAS BEEN COMPLETED