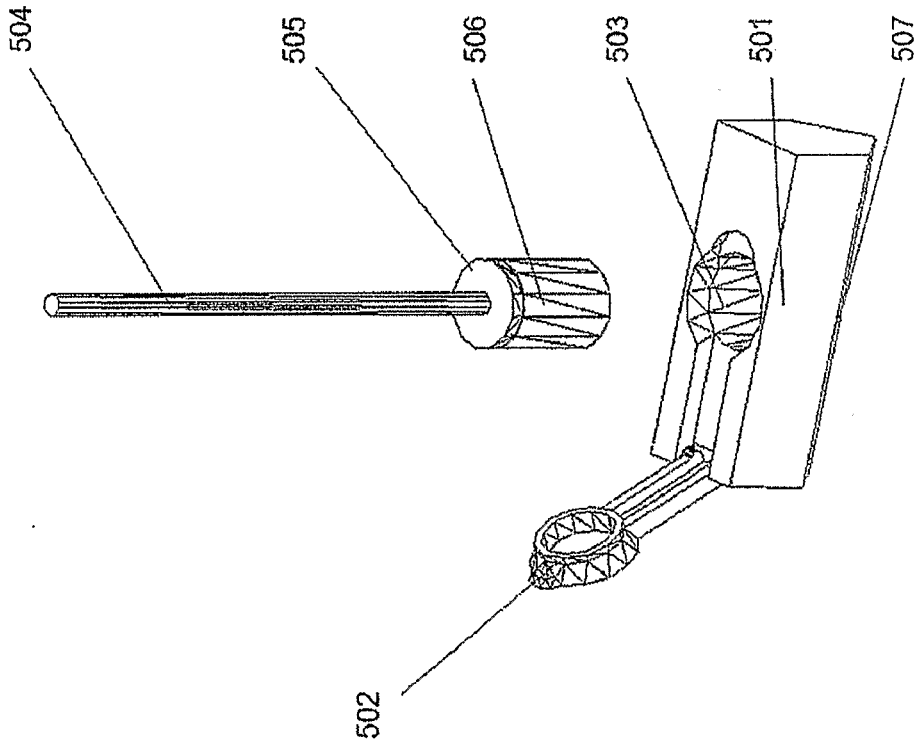


Figure 5c