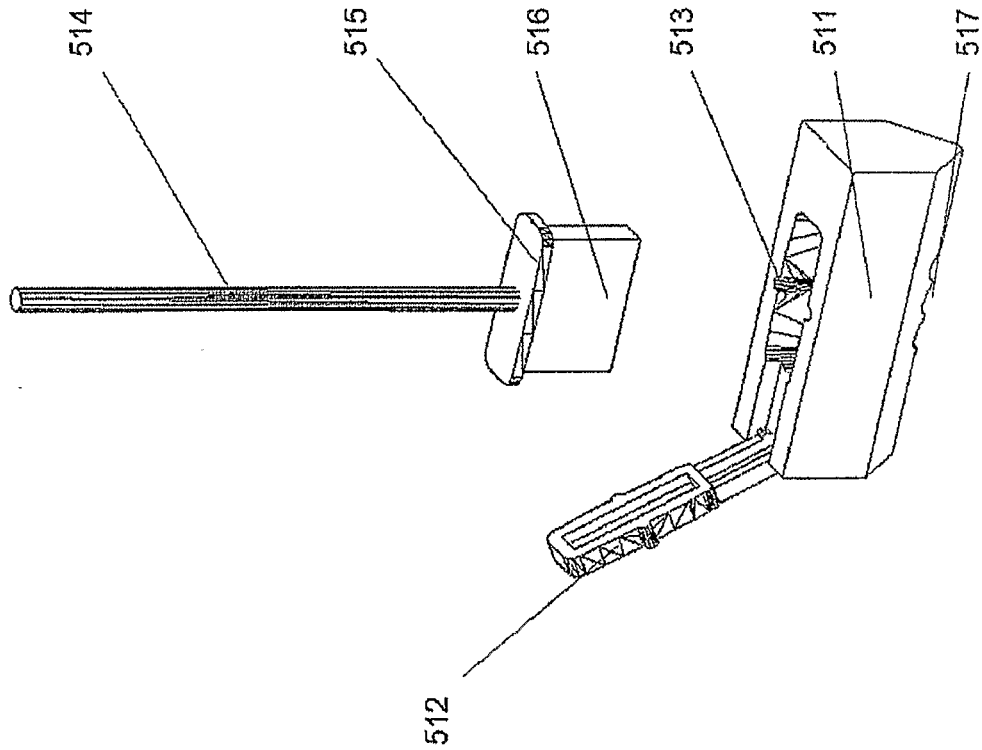

Figure 5d