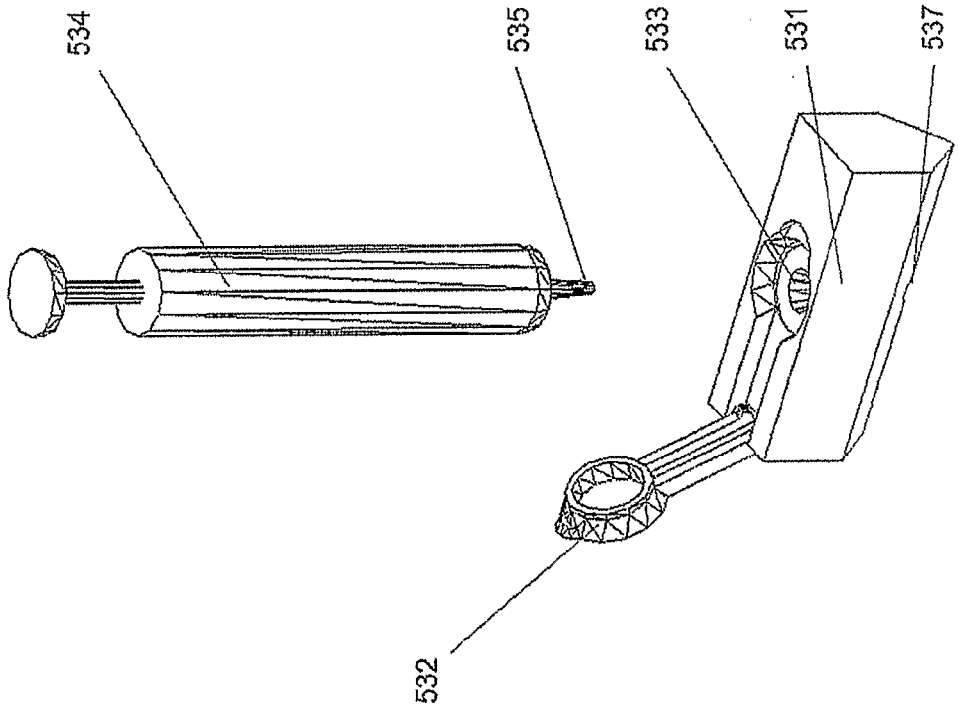

Figure 5f