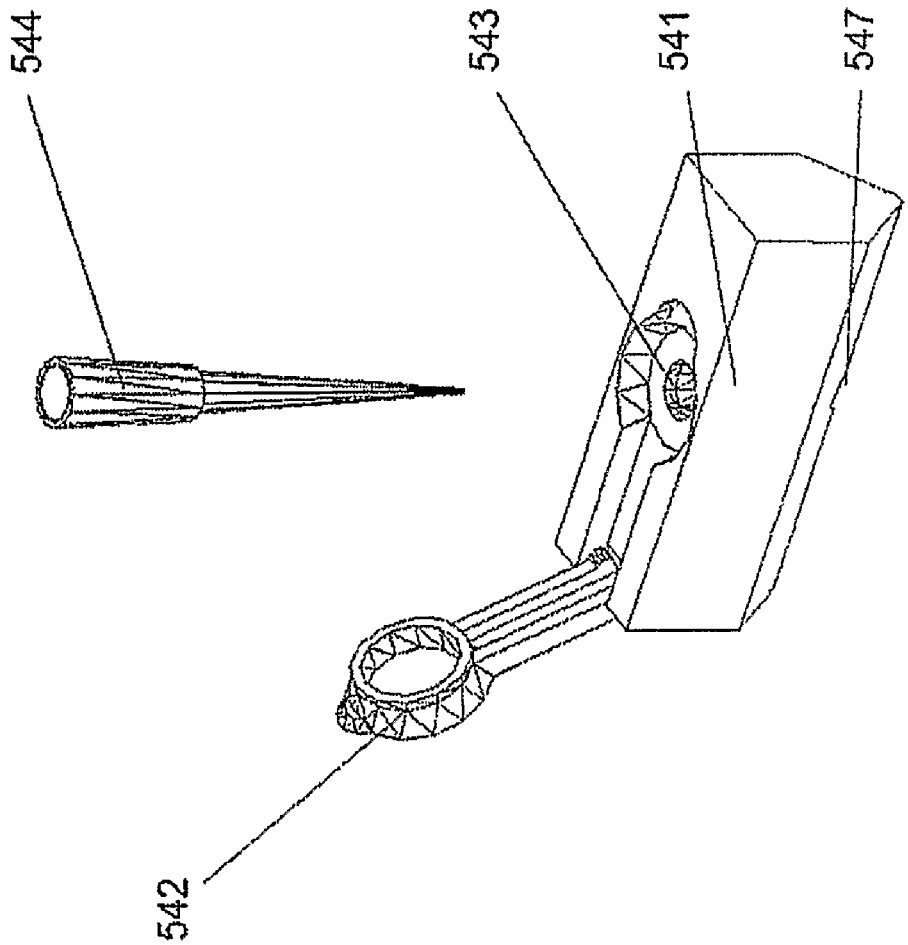

Figure 5g