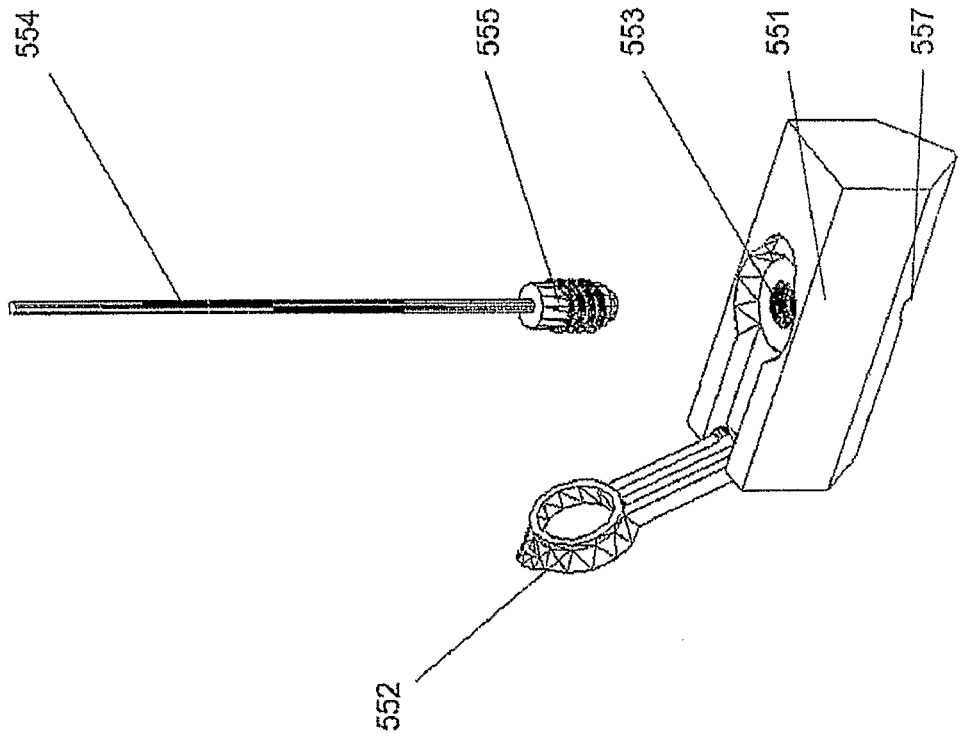

Figure 5h