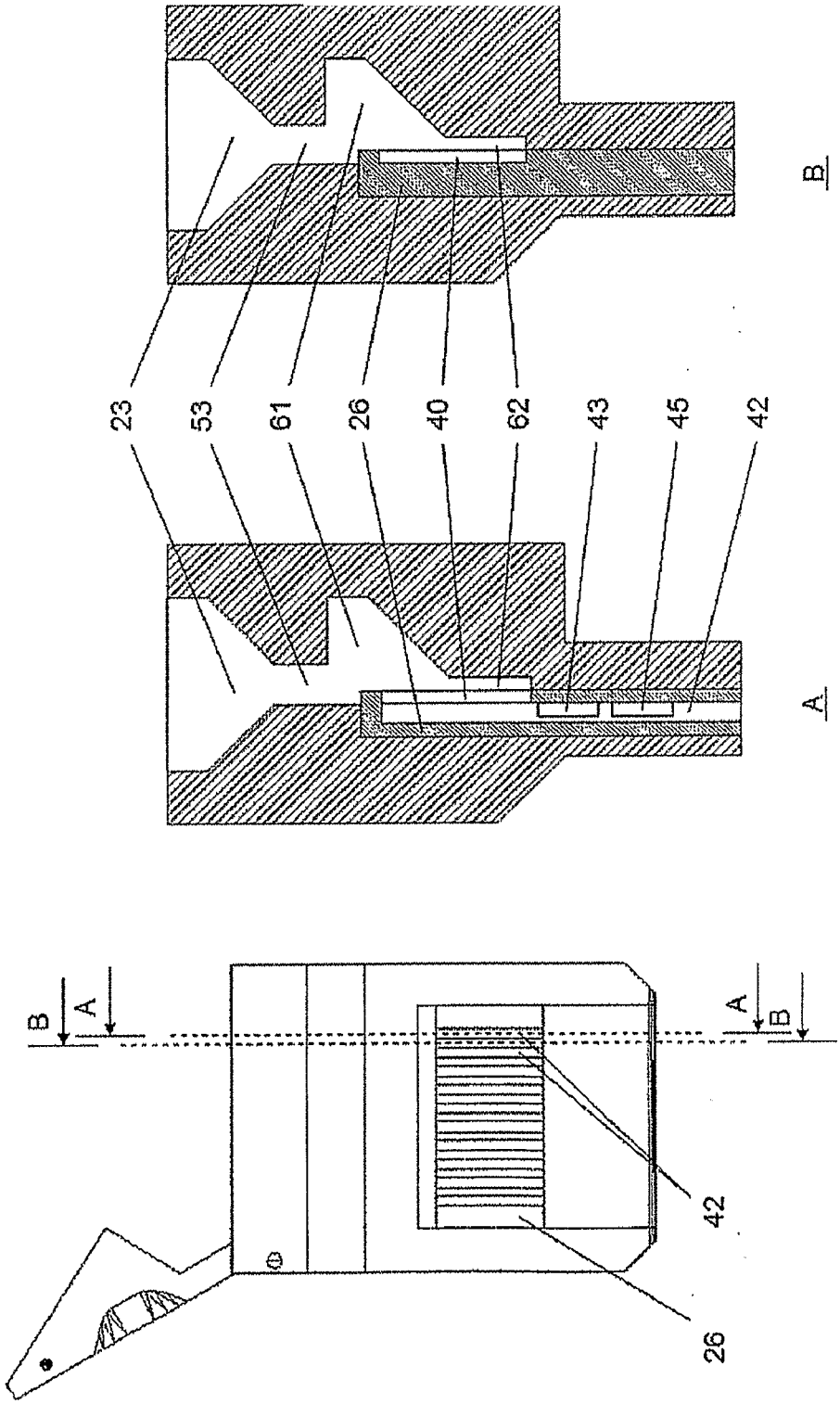

Figure 6a