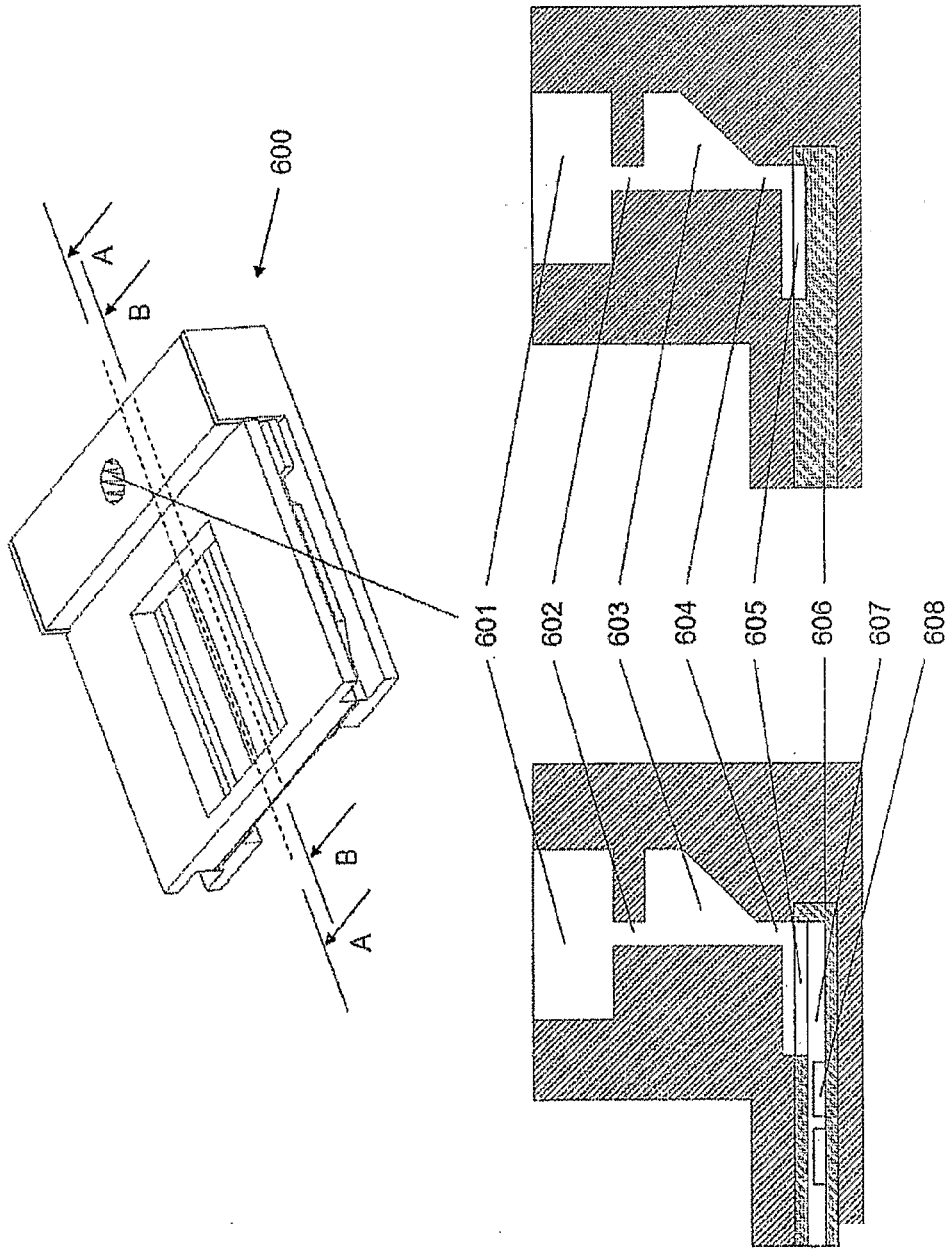

Figure 6b