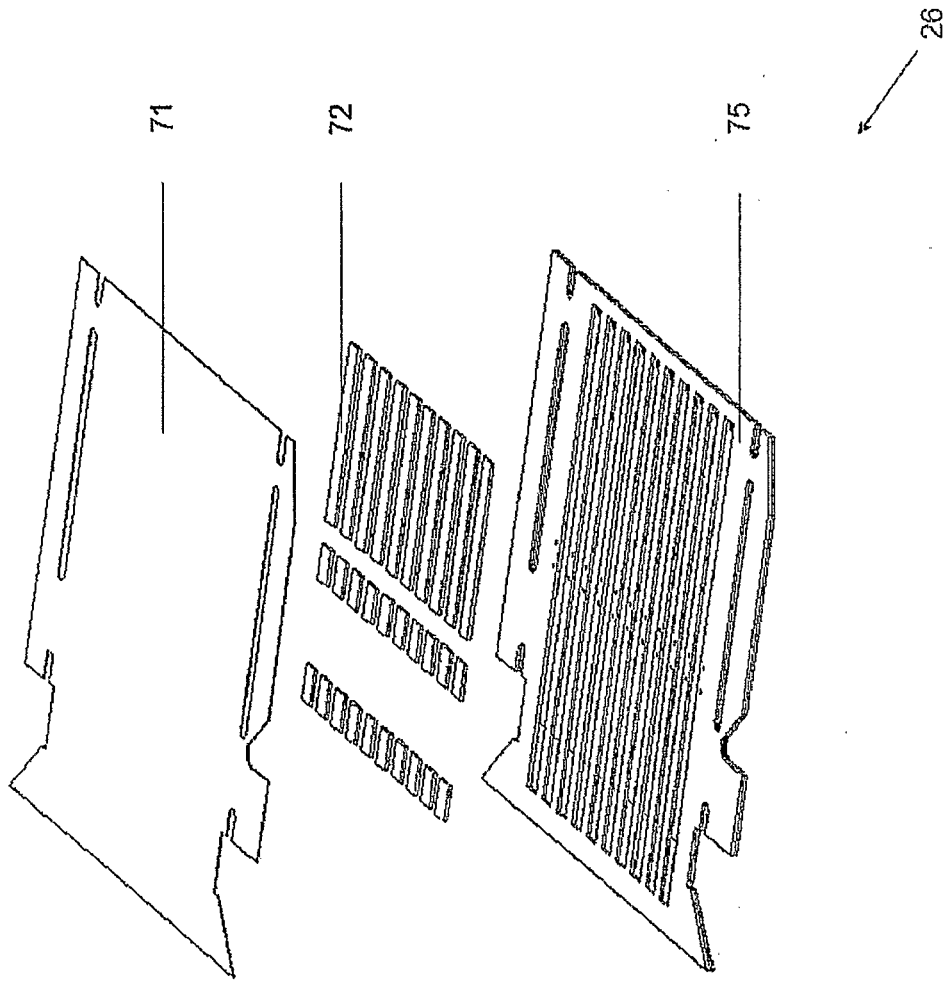

Figure 7b