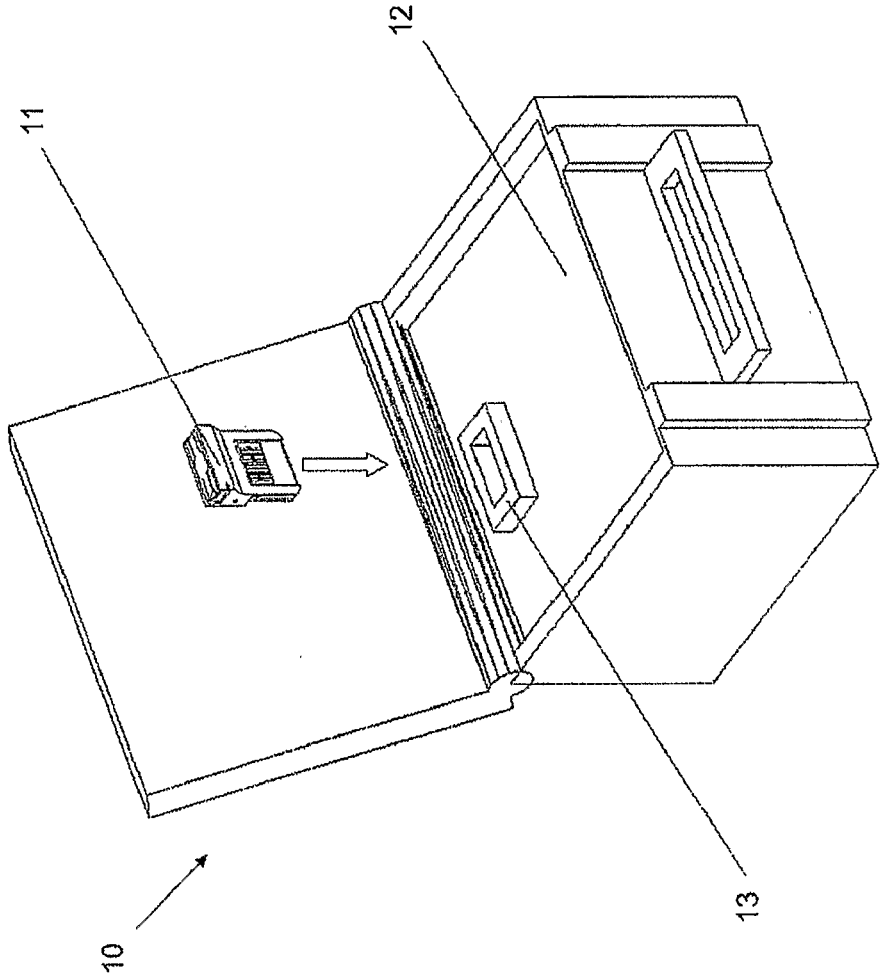


Figure 1