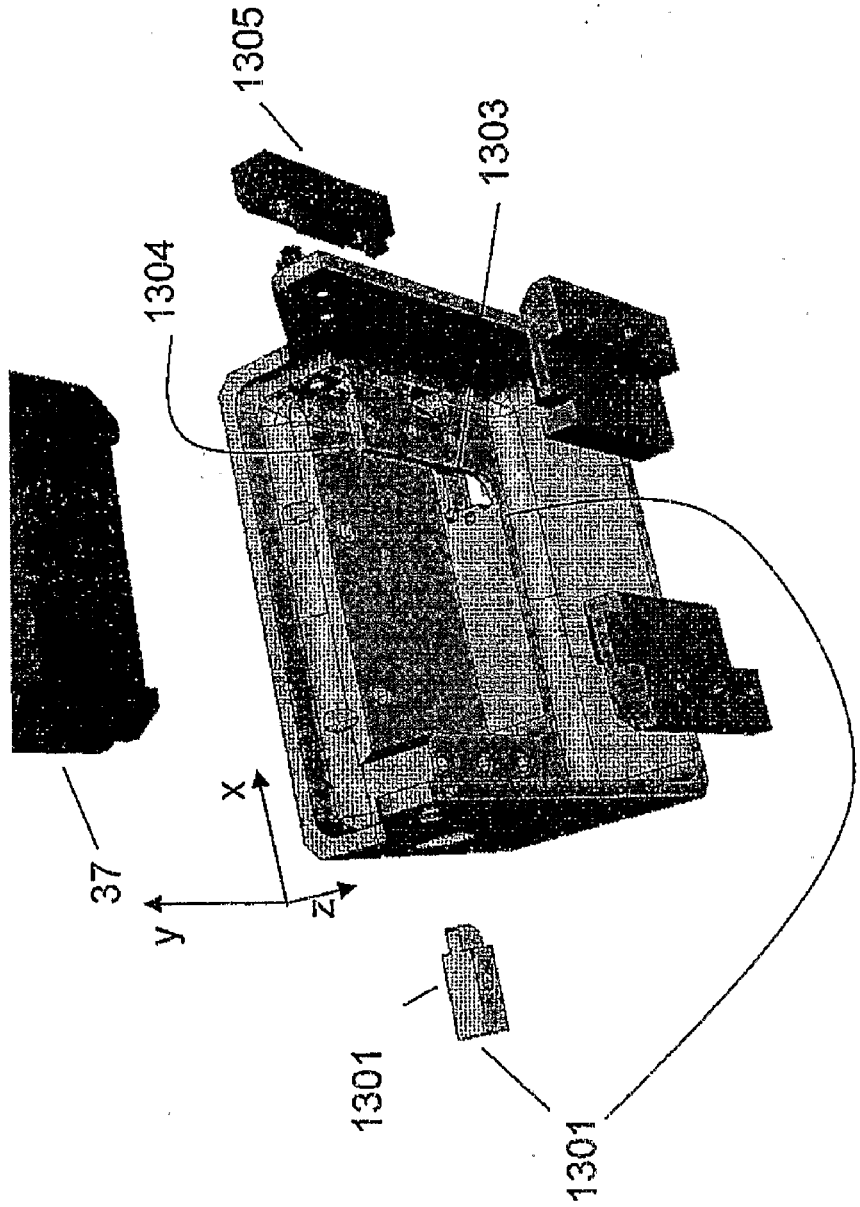

Figure 13