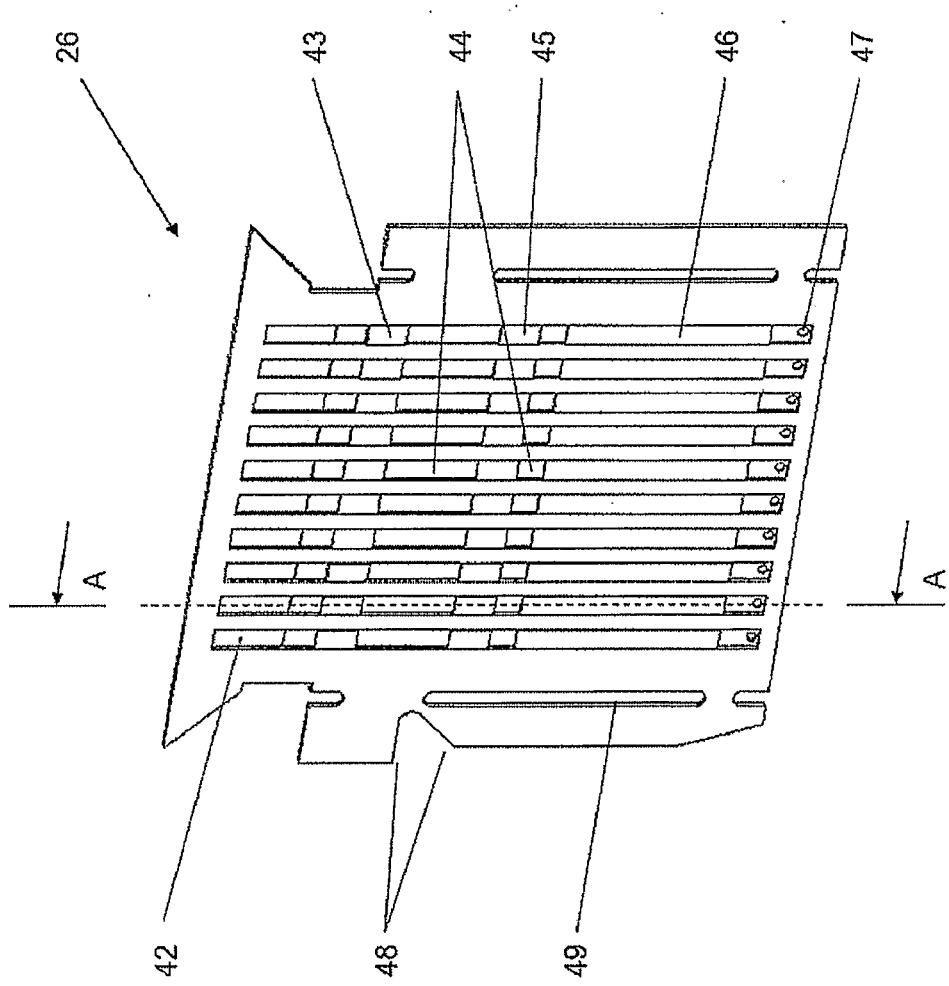

Figure 4a