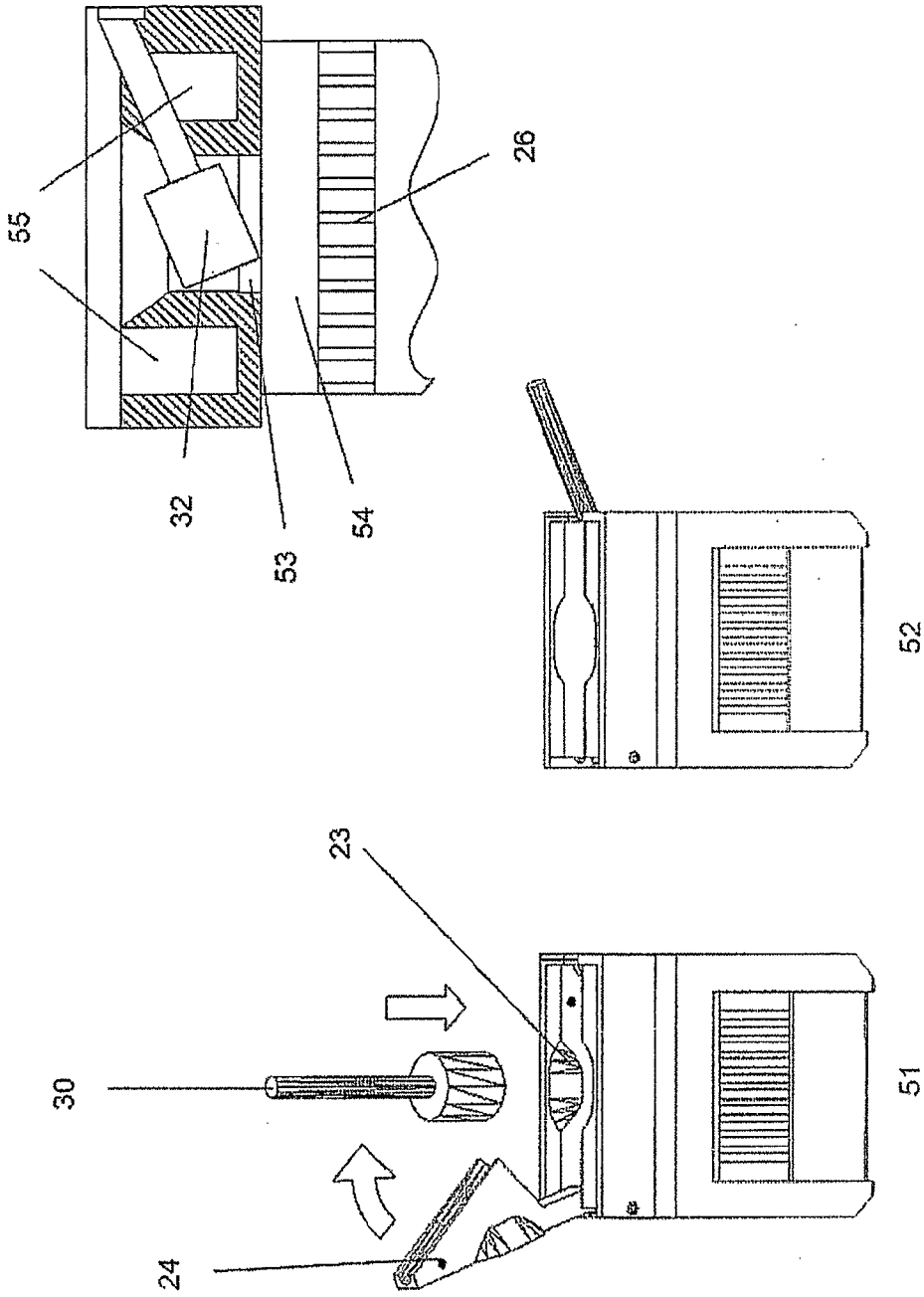

Figure 5a