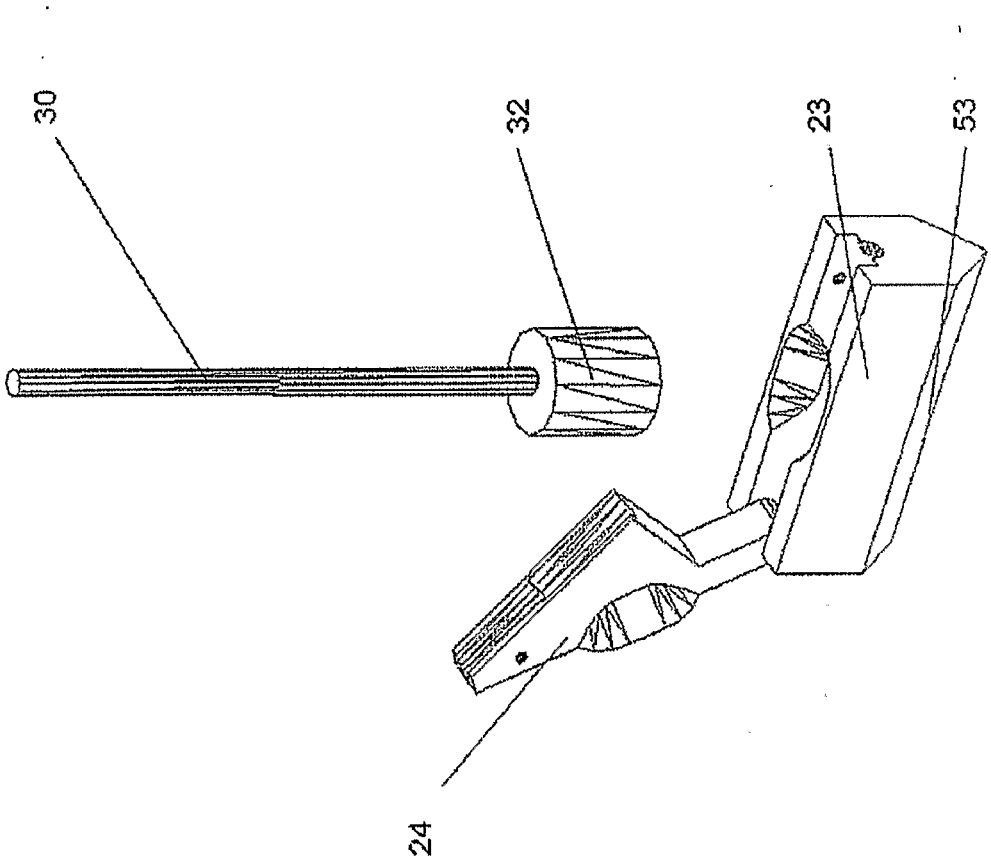

Figure 5b