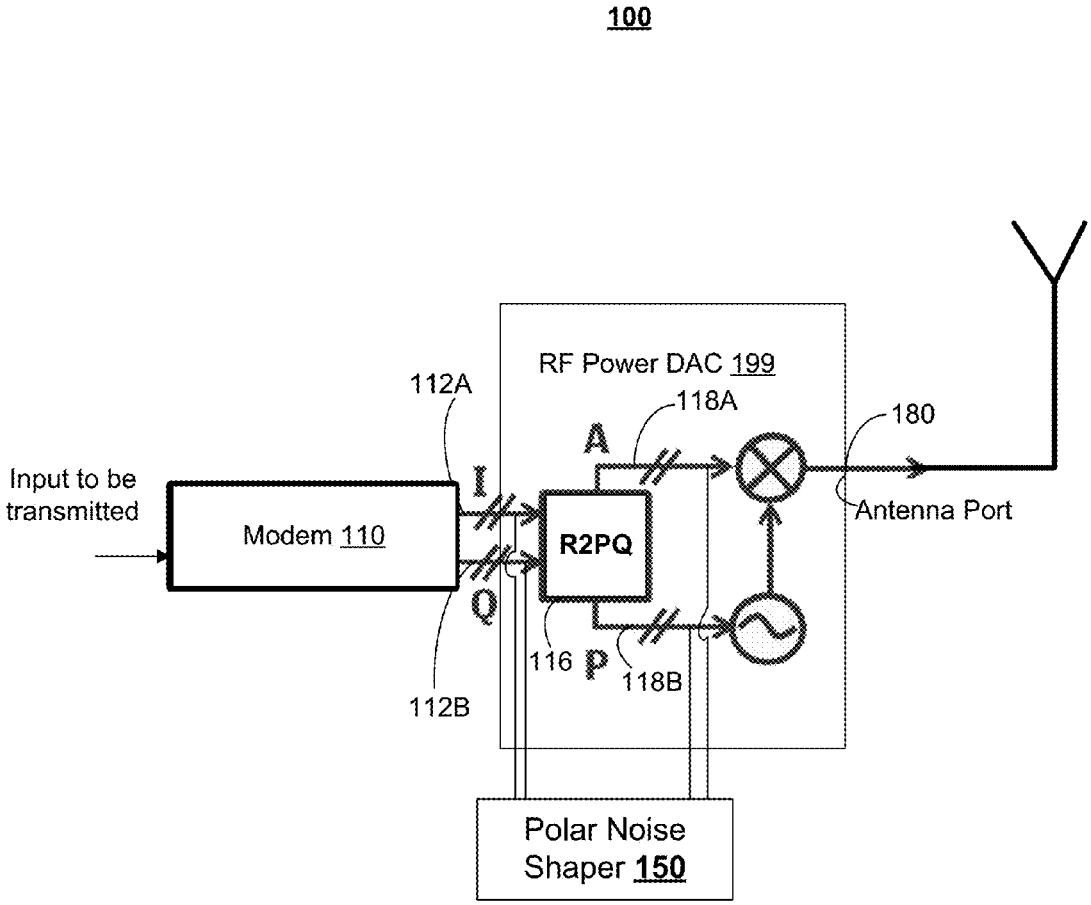
100
RF Power DAC 199
112A
118A
180
A
I
Input to be transmitted
Modem 110
R2PQ
Antenna Port
Q
116
P
118B
112B
Polar Noise Shaper 150

FIG. 1