US 20170090654A1

(19) United States

(12) Patent Application Publication

Silvanto et al.

(10) Pub. No.: US 2017/0090654 A1

(43) Pub. Date: Mar. 30, 2017

(54) **KEYBOARD WITH ADAPTIVE INPUT ROW**

(71) Applicant: **Apple Inc.**, Cupertino, CA (US)

(72) Inventors: **Mikael M. Silvanto**, Cupertino, CA (US); **Erik A. Zweigle**, Cupertino, CA (US); **Jun Qi**, Cupertino, CA (US); **Christiaan A. Ligtenberg**, Cupertino, CA (US); **Robert Y. Cao**, Cupertino, CA (US); **Bartley K. Andre**, Cupertino, CA (US); **Molly J. Anderson**, Cupertino, CA (US); **ByoungSuk Kim**, Cupertino, CA (US); **Dinesh C. Mathew**, Cupertino, CA (US); **Victor H. Yin**, Cupertino, CA (US)

(21) Appl. No.: **15/258,863**

(22) Filed: **Sep. 7, 2016**

Related U.S. Application Data

(60) Provisional application No. 62/234,950, filed on Sep. 30, 2015.

Publication Classification

(51) **Int. Cl.**

G06F 3/041	(2006.01)
G06F 3/023	(2006.01)
G06F 3/044	(2006.01)

(52) **U.S. Cl.**

CPC ***G06F 3/0416*** (2013.01); ***G06F 3/044*** (2013.01); ***G06F 3/0231*** (2013.01); *G06F 2203/04104* (2013.01); *G06F 2203/04105* (2013.01); *G06F 2203/04111* (2013.01)

(57) **ABSTRACT**
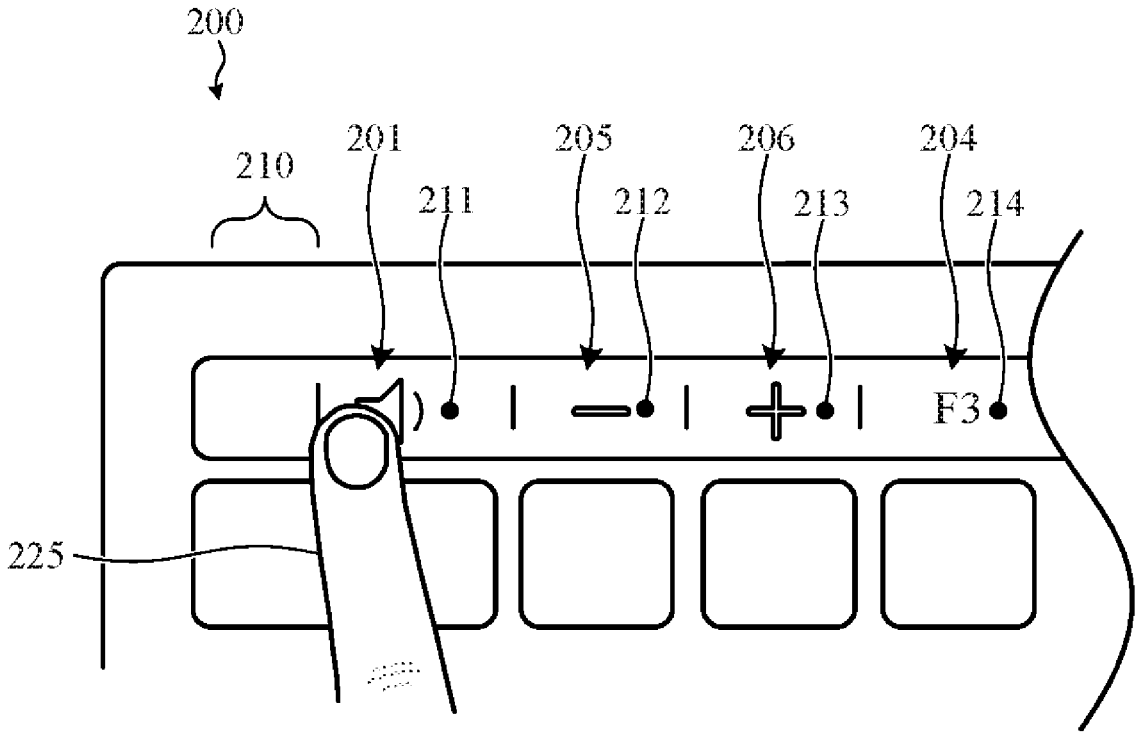
Embodiments related to an electronic device having an adaptive input row. The adaptive input row may be positioned within an opening of a device and include a cover for receiving a touch and a display that is configured to present an adaptable set of indicia. The adaptive input row may also include one or more sensors for detecting the location of a touch and/or the magnitude of a force of the touch. The adaptive input row may be positioned adjacent or proximate to a keyboard of the electronic device.